ASME B16.5-2020

(Revision of ASME B16.5-2017)

Pipe Flanges and Flanged Fittings

NPS ½ Through NPS 24 Metric/Inch Standard

AN AMERICAN NATIONAL STANDARD

The American Society of Mechanical Engineers

ASME B16.5-2020
(Revision of ASME B16.5-2017)

Pipe Flanges and Flanged Fittings

NPS ½ Through NPS 24 Metric/Inch Standard

AN AMERICAN NATIONAL STANDARD

The American Society of Mechanical Engineers
Two Park Avenue • New York, NY • 10016 USA

Date of Issuance: January 29, 2021

The next edition of this Standard is scheduled for publication in 2024.

ASME issues written replies to inquiries concerning interpretations of technical aspects of this Standard. Periodically certain actions of the ASME B16 Committee may be published as Cases. Cases and interpretations are published on the ASME website under the Committee Pages at http://cstools.asme.org/ as they are issued.

Errata to codes and standards may be posted on the ASME website under the Committee Pages to provide corrections to incorrectly published items, or to correct typographical or grammatical errors in codes and standards. Such errata shall be used on the date posted.

The Committee Pages can be found at http://cstools.asme.org/. There is an option available to automatically receive an e-mail notification when errata are posted to a particular code or standard. This option can be found on the appropriate Committee Page after selecting "Errata" in the "Publication Information" section.

ASME is the registered trademark of The American Society of Mechanical Engineers.

This code or standard was developed under procedures accredited as meeting the criteria for American National Standards. The Standards Committee that approved the code or standard was balanced to assure that individuals from competent and concerned interests have had an opportunity to participate. The proposed code or standard was made available for public review and comment that provides an opportunity for additional public input from industry, academia, regulatory agencies, and the public-at-large.

ASME does not "approve," "rate," or "endorse" any item, construction, proprietary device, or activity.

ASME does not take any position with respect to the validity of any patent rights asserted in connection with any items mentioned in this document, and does not undertake to insure anyone utilizing a standard against liability for infringement of any applicable letters patent, nor assume any such liability. Users of a code or standard are expressly advised that determination of the validity of any such patent rights, and the risk of infringement of such rights, is entirely their own responsibility.

Participation by federal agency representative(s) or person(s) affiliated with industry is not to be interpreted as government or industry endorsement of this code or standard.

ASME accepts responsibility for only those interpretations of this document issued in accordance with the established ASME procedures and policies, which precludes the issuance of interpretations by individuals.

No part of this document may be reproduced in any form,
in an electronic retrieval system or otherwise,
without the prior written permission of the publisher.

The American Society of Mechanical Engineers
Two Park Avenue, New York, NY 10016-5990

Copyright © 2021 by
THE AMERICAN SOCIETY OF MECHANICAL ENGINEERS
All rights reserved
Printed in U.S.A.

CONTENTS

Foreword . . . viii
Committee Roster . . . x
Correspondence With the B16 Committee . . . xi
Summary of Changes . . . xiii
List of Changes in Record Number Order . . . xvi

1 **General** . . . 1
2 **Pressure–Temperature Ratings** . . . 2
3 **Component Size** . . . 3
4 **Marking** . . . 4
5 **Materials** . . . 4
6 **Dimensions** . . . 8
7 **Tolerances** . . . 13
8 **Pressure Testing** . . . 14

Mandatory Appendices
I Threading of Pipe for American National Standard Threaded Flanges . . . 189
II References . . . 191

Nonmandatory Appendices
A Method Used for Establishing Pressure–Temperature Ratings . . . 194
B Limiting Dimensions of Gaskets Other Than Ring Joint Gaskets . . . 198
C Method for Calculating Bolt Lengths . . . 200
D Quality System Program . . . 202
E Dimensions of Classes 400, 600, 900, 1500, and 2500 Flanged Fittings in U.S. Customary Units 203
F Method Used to Establish SI Unit Values . . . 231

Figures
1 Bevel for Outside Thickness . . . 15
2 Bevel for Inside Thickness . . . 15
3 Bevel for Combined Thickness . . . 15
4 Straight Hub Welding Flanges . . . 15
5 Method of Designating Outlets of Reducing Fittings in Specifications (Flanged Fittings) . . . 16
6 End Flange Facings and Their Relationship to Flange Thickness and Center-to-End and End-to-End Dimensions . . . 17
7 Welding Neck Flange Hub and Welding End Profiles for Wall Thicknesses *t* From 5 mm (0.19 in.) to 22 mm (0.88 in.) . . . 19
8 Welding Neck Flange Hub and Welding End Profiles for Wall Thicknesses *t* Greater Than 22 mm (0.88 in.) . . . 20

9	Inside Contour for Use With Rectangular Backing Ring	21
10	Inside Contour for Use With Taper Backing Ring	21
11	Thread Length for Connection Tapping	22
12	Socket Welding for Connections	22
13	Bosses for Connections	22
14	Butt Welding for Connections	22
15	Method of Designating Location of Auxiliary Connections When Specified (Flanged Fittings)	23
C-1	Specified Machine Bolt Length	200
C-2	Specified Stud Bolt Length	200

Tables

1.1-1	List of Material Specifications	5
1.1-2	List of Bolting Specifications: Applicable ASTM Specifications	9
1.1-3	Flange Bolting Dimensional Recommendations	12
2-1.1	Pressure–Temperature Ratings for Group 1.1 Materials	24
2-1.1C	Pressure–Temperature Ratings for Group 1.1 Materials	25
2-1.2	Pressure–Temperature Ratings for Group 1.2 Materials	26
2-1.2C	Pressure–Temperature Ratings for Group 1.2 Materials	27
2-1.3	Pressure–Temperature Ratings for Group 1.3 Materials	28
2-1.3C	Pressure–Temperature Ratings for Group 1.3 Materials	29
2-1.4	Pressure–Temperature Ratings for Group 1.4 Materials	30
2-1.4C	Pressure–Temperature Ratings for Group 1.4 Materials	31
2-1.5	Pressure–Temperature Ratings for Group 1.5 Materials	32
2-1.5C	Pressure–Temperature Ratings for Group 1.5 Materials	33
2-1.7	Pressure–Temperature Ratings for Group 1.7 Materials	34
2-1.7C	Pressure–Temperature Ratings for Group 1.7 Materials	35
2-1.9	Pressure–Temperature Ratings for Group 1.9 Materials	36
2-1.9C	Pressure–Temperature Ratings for Group 1.9 Materials	37
2-1.10	Pressure–Temperature Ratings for Group 1.10 Materials	38
2-1.10C	Pressure–Temperature Ratings for Group 1.10 Materials	39
2-1.11	Pressure–Temperature Ratings for Group 1.11 Materials	40
2-1.11C	Pressure–Temperature Ratings for Group 1.11 Materials	41
2-1.13	Pressure–Temperature Ratings for Group 1.13 Materials	42
2-1.13C	Pressure–Temperature Ratings for Group 1.13 Materials	43
2-1.14	Pressure–Temperature Ratings for Group 1.14 Materials	44
2-1.14C	Pressure–Temperature Ratings for Group 1.14 Materials	45
2-1.15	Pressure–Temperature Ratings for Group 1.15 Materials	46
2-1.15C	Pressure–Temperature Ratings for Group 1.15 Materials	47
2-1.17	Pressure–Temperature Ratings for Group 1.17 Materials	48
2-1.17C	Pressure–Temperature Ratings for Group 1.17 Materials	49
2-1.18	Pressure–Temperature Ratings for Group 1.18 Materials	50
2-1.18C	Pressure–Temperature Ratings for Group 1.18 Materials	51
2-2.1	Pressure–Temperature Ratings for Group 2.1 Materials	52
2-2.1C	Pressure–Temperature Ratings for Group 2.1 Materials	53
2-2.2	Pressure–Temperature Ratings for Group 2.2 Materials	54

2-2.2C	Pressure–Temperature Ratings for Group 2.2 Materials	55
2-2.3	Pressure–Temperature Ratings for Group 2.3 Materials	56
2-2.3C	Pressure–Temperature Ratings for Group 2.3 Materials	56
2-2.4	Pressure–Temperature Ratings for Group 2.4 Materials	57
2-2.4C	Pressure–Temperature Ratings for Group 2.4 Materials	58
2-2.5	Pressure–Temperature Ratings for Group 2.5 Materials	59
2-2.5C	Pressure–Temperature Ratings for Group 2.5 Materials	60
2-2.6	Pressure–Temperature Ratings for Group 2.6 Materials	61
2-2.6C	Pressure–Temperature Ratings for Group 2.6 Materials	62
2-2.7	Pressure–Temperature Ratings for Group 2.7 Materials	63
2-2.7C	Pressure–Temperature Ratings for Group 2.7 Materials	64
2-2.8	Pressure–Temperature Ratings for Group 2.8 Materials	65
2-2.8C	Pressure–Temperature Ratings for Group 2.8 Materials	65
2-2.9	Pressure–Temperature Ratings for Group 2.9 Materials	66
2-2.9C	Pressure–Temperature Ratings for Group 2.9 Materials	67
2-2.10	Pressure–Temperature Ratings for Group 2.10 Materials	68
2-2.10C	Pressure–Temperature Ratings for Group 2.10 Materials	69
2-2.11	Pressure–Temperature Ratings for Group 2.11 Materials	70
2-2.11C	Pressure–Temperature Ratings for Group 2.11 Materials	71
2-2.12	Pressure–Temperature Ratings for Group 2.12 Materials	72
2-2.12C	Pressure–Temperature Ratings for Group 2.12 Materials	73
2-3.1	Pressure–Temperature Ratings for Group 3.1 Materials	74
2-3.1C	Pressure–Temperature Ratings for Group 3.1 Materials	74
2-3.2	Pressure–Temperature Ratings for Group 3.2 Materials	75
2-3.2C	Pressure–Temperature Ratings for Group 3.2 Materials	75
2-3.3	Pressure–Temperature Ratings for Group 3.3 Materials	76
2-3.3C	Pressure–Temperature Ratings for Group 3.3 Materials	77
2-3.4	Pressure–Temperature Ratings for Group 3.4 Materials	78
2-3.4C	Pressure–Temperature Ratings for Group 3.4 Materials	78
2-3.5	Pressure–Temperature Ratings for Group 3.5 Materials	79
2-3.5C	Pressure–Temperature Ratings for Group 3.5 Materials	80
2-3.6	Pressure–Temperature Ratings for Group 3.6 Materials	81
2-3.6C	Pressure–Temperature Ratings for Group 3.6 Materials	82
2-3.7	Pressure–Temperature Ratings for Group 3.7 Materials	83
2-3.7C	Pressure–Temperature Ratings for Group 3.7 Materials	83
2-3.8	Pressure–Temperature Ratings for Group 3.8 Materials	84
2-3.8C	Pressure–Temperature Ratings for Group 3.8 Materials	85
2-3.9	Pressure–Temperature Ratings for Group 3.9 Materials	86
2-3.9C	Pressure–Temperature Ratings for Group 3.9 Materials	87
2-3.10	Pressure–Temperature Ratings for Group 3.10 Materials	88
2-3.10C	Pressure–Temperature Ratings for Group 3.10 Materials	88
2-3.11	Pressure–Temperature Ratings for Group 3.11 Materials	89
2-3.11C	Pressure–Temperature Ratings for Group 3.11 Materials	89
2-3.12	Pressure–Temperature Ratings for Group 3.12 Materials	90
2-3.12C	Pressure–Temperature Ratings for Group 3.12 Materials	90

2-3.13 Pressure–Temperature Ratings for Group 3.13 Materials 91
2-3.13C Pressure–Temperature Ratings for Group 3.13 Materials 91
2-3.14 Pressure–Temperature Ratings for Group 3.14 Materials 92
2-3.14C Pressure–Temperature Ratings for Group 3.14 Materials 93
2-3.15 Pressure–Temperature Ratings for Group 3.15 Materials 94
2-3.15C Pressure–Temperature Ratings for Group 3.15 Materials 95
2-3.16 Pressure–Temperature Ratings for Group 3.16 Materials 96
2-3.16C Pressure–Temperature Ratings for Group 3.16 Materials 97
2-3.17 Pressure–Temperature Ratings for Group 3.17 Materials 98
2-3.17C Pressure–Temperature Ratings for Group 3.17 Materials 98
2-3.19 Pressure–Temperature Ratings for Group 3.19 Materials 99
2-3.19C Pressure–Temperature Ratings for Group 3.19 Materials 100
3 Permissible Imperfections in Flange Facing Finish for Raised Face and Large Male and Female Flanges 101
3C Permissible Imperfections in Flange Facing Finish for Raised Face and Large Male and Female Flanges 102
4 Dimensions of Facings (Other Than Ring Joints, All Pressure Rating Classes) 103
4C Dimensions of Facings (Other Than Ring Joints, All Pressure Rating Classes) 105
5 Dimensions of Ring Joint Facings (All Pressure Rating Classes) 108
5C Dimensions of Ring Joint Facings (All Pressure Rating Classes) 116
6 Reducing Threaded and Slip-On Pipe Flanges for Classes 150 Through 2500 Pipe Flanges . . . 123
6C Reducing Threaded and Slip-On Pipe Flanges for Classes 150 Through 2500 Pipe Flanges . . . 124
7 Templates for Drilling Class 150 Pipe Flanges and Flanged Fittings 125
7C Templates for Drilling Class 150 Pipe Flanges and Flanged Fittings 126
8 Dimensions of Class 150 Flanges 127
8C Dimensions of Class 150 Flanges 130
9 Dimensions of Class 150 Flanged Fittings 134
9C Dimensions of Class 150 Flanged Fittings 140
10 Templates for Drilling Class 300 Pipe Flanges and Flanged Fittings 143
10C Templates for Drilling Class 300 Pipe Flanges and Flanged Fittings 144
11 Dimensions of Class 300 Flanges 145
11C Dimensions of Class 300 Flanges 148
12 Dimensions of Class 300 Flanged Fittings 152
12C Dimensions of Class 300 Flanged Fittings 156
13 Templates for Drilling Class 400 Pipe Flanges 159
13C Templates for Drilling Class 400 Pipe Flanges 160
14 Dimensions of Class 400 Flanges 161
14C Dimensions of Class 400 Flanges 163
15 Templates for Drilling Class 600 Pipe Flanges and Flanged Fittings 165
15C Templates for Drilling Class 600 Pipe Flanges and Flanged Fittings 166
16 Dimensions of Class 600 Flanges 167
16C Dimensions of Class 600 Flanges 169
17 Templates for Drilling Class 900 Pipe Flanges and Flanged Fittings 171
17C Templates for Drilling Class 900 Pipe Flanges and Flanged Fittings 172
18 Dimensions of Class 900 Flanges 173
18C Dimensions of Class 900 Flanges 175

19	Templates for Drilling Class 1500 Pipe Flanges	177
19C	Templates for Drilling Class 1500 Pipe Flanges	178
20	Dimensions of Class 1500 Flanges	179
20C	Dimensions of Class 1500 Flanges	181
21	Templates for Drilling Class 2500 Pipe Flanges	183
21C	Templates for Drilling Class 2500 Pipe Flanges	184
22	Dimensions of Class 2500 Flanges	185
22C	Dimensions of Class 2500 Flanges	187
I-1	Projection of Threaded Pipe End Through a Ring Gage	190
A-1	Rating Ceiling Pressure — p_c, bar	196
A-2	Rating Ceiling Pressure — p_c, psi	197
B-1	Gasket Groups and Typical Materials	199
C-1	Thickness for Lapped Joints	201
C-2	F Values	201
C-3	n Values	201
E-1	Dimensions of Class 400 Flanged Fittings	204
E-2	Dimensions of Class 600 Flanged Fittings	210
E-3	Dimensions of Class 900 Flanged Fittings	216
E-4	Dimensions of Class 1500 Flanged Fittings	222
E-5	Dimensions of Class 2500 Flanged Fittings	228

FOREWORD

In 1920, the American Engineering Standards Committee [later the American Standards Associations (ASA) and currently the American National Standards Institute (ANSI)] organized Sectional Committee B16 to unify and further develop standards for pipe flanges and fittings (and later for valves and gaskets). Cosponsors of the B16 Committee were The American Society of Mechanical Engineers (ASME), the Heating and Piping Contractors National Association [now Mechanical Contractors Association of America (MCAA)], and the Manufacturers Standardization Society of the Valves and Fittings Industry (MSS). Cosponsors were later designated as cosecretariat organizations.

The Committee soon recognized the need for standardization of steel pipe flanges. In May 1923, Subcommittee 3 was organized to develop such standards for pressures in the 250-psi to 3,200-psi range and for elevated temperatures. Active work began in October, including on steel flanged fittings. The first proposed standard was submitted to the Committee in April 1926 and approved by letter ballot in December. After favorable review by the three sponsor organizations, the Standard was approved as American Tentative Standard B16e in June 1927.

Experience in using the Standard showed the need for hub dimensions of companion flanges and for other changes, including rerating of 250-lb and 1,350-lb flanges and development of flanged fittings with integral bases. An investigation was made into the factors determining stiffness of flanges and flange hubs. The revised edition was approved as ASA B16e-1932.

A revision was initiated in 1936, stimulated by suggestions from Committee members and industrial users. The resulting 1939 edition contained standards for welding neck flanges (completed in March 1937), 1,500-lb flanges in the 14-in. through 24-in. range, 2,500-lb flanges and flanged fittings in the $\frac{1}{2}$-in. through 12-in. range, and dimensions for a full line of ring joint flanges developed by the American Petroleum Institute. Pressure–temperature ratings for alloy steel flanges and fittings, developed by Subcommittee 4, were included for the first time.

In August 1942, the War Production Board requested a review of measures to conserve vital materials in piping components. A special War Committee of B16 was appointed and, operating under War Standard Procedure, developed revised pressure–temperature ratings for all materials and pressure classes. The ratings were published as American War Standard B16e5-1943. In 1945, under normal procedures, Subcommittees 3 and 4 reviewed the 1939 standard and 1943 ratings and recommended adoption of the wartime ratings. Their report was approved as Supplement No. 1 to B16e-1939 and published as ASA B16e6-1949. In addition to ratings, the supplement updated material specification references and added a table of metal wall thickness for welding-end valves.

Subcommittee 3 then began a revision of the entire standard. Technically, the 1949 Supplement was absorbed, new materials were recognized, a general rating method was developed and added as an appendix, and welding end preparations were expanded. Editorially, a new style of presentation was worked out, including tables rearranged for easier use. Approval by Sectional Committee, cosponsors, and ASA resulted in the publication of ASA B16.5-1953 (designation changed from B16e).

Work soon began on further revisions. Class B ratings were deleted, and Class A ratings were clarified as the standard. An appendix defined qualifications for gaskets, other than ring joint, which would merit the ratings. Another appendix defined the method for calculating bolt lengths, including the measurement of stud bolt length between thread ends instead of points. Pressure–temperature ratings for several new materials were added, the table of welding end dimensions was expanded, and the temperatures used in determining ratings were redefined. The resulting new edition, after approval, was published as ASA B16.5-1957.

The more modest revision approved as ASA B16.5-1961 changed the text to clarify the intent or to make requirements easier to administer. The next revision began in 1963 with nearly 100 comments and suggestions. No fundamental changes were made, but the text was further clarified, and wall thicknesses less than $\frac{1}{4}$ in. for flanged fittings were recognized in the 1968 edition.

A new joint study of ratings between Subcommittees 3 and 4 was initiated before the next revision. Based on the Subcommittee 4 report, the rating procedure was revised, and a rating basis for Class 150 (150-lb) flanges was developed. New product forms, bar and plate, were added for special applications, including fabricated flanged valves and fittings. Reference to welding-end valves was not included, because a separate standard for them was planned. Bolt length calculations based on worst case tolerances led to a revision of tabulated lengths. Testing of valves subsequently published by Subcommittee 15 closure members was added to the test requirements. Following final approval on October 23, the Standard was published as ANSI B16.5-1973.

Subcommittee N (formerly 15) was assigned responsibility for all valve standards in late 1973. Subcommittee C (formerly 3) continued to have responsibility for flange standards. A revision was accordingly initiated to remove all references to valves. At the same time, comments from users and changes in the ASME Boiler and Pressure Vessel Code (BPVC) led to significant revisions in the Class 150 rating basis and in the ratings of stainless steel and certain alloy steel flanges and flanged fittings in all rating classes. Extensive public review comments led to the addition of considerations for bolting and gaskets for flanged joints and of marking requirements. To avoid having to make frequent and confusing changes to the ratings as a result of further changes to the BPVC-allowable stresses, Subcommittees C and N agreed that ratings would be left alone unless the relevant BPVC stress values were changed by more than 10%. After final approval by the Standards Committee, cosponsors, and ANSI, ANSI B16.5-1977, Steel Pipe Flanges and Flanged Fittings, was published on June 16, 1977.

In 1979, work began on another new edition. Materials coverage was expanded by the addition of nickel and nickel alloys. Bolting rules were revised to cover nickel alloy bolts. Bolt hole and bolting were changed to provide interchangeability between inch and metric dimensions. Metric dimensional tables were made informational rather than alternative requirements of the Standard. Final approval was granted for ANSI B16.5-1984, Pipe Flanges and Flanged Fittings, on August 14.

In 1982, American National Standards Committee B16 was reorganized as an ASME Committee operating under procedures accredited by ANSI. The 1988 edition of the Standard extended nickel alloy ratings to higher temperatures, clarifying flat face flange requirements, and included other minor revisions. The Committee determined that any metric standard for flanges would stand alone, with metric bolting and gaskets; hence, metric equivalents were deleted. Following approval by the Standards Committee and ASME, approval as an American National Standard was given by ANSI on April 7, 1988, with the new designation ASME/ANSI B16.5-1988.

The 1996 edition allowed flanges marked with more than one material grade or specification, revised flange facing finish requirements, revised pressure–temperature ratings for several material groups, added a nonmandatory quality system annex, and included several other revisions. The 1996 edition was approved by ANSI on October 3, 1996, with the new designation ASME B16.5-1996.

The 2003 edition included metric units as the primary reference units while maintaining U.S. Customary units in either parenthetical or separate forms. New materials were added, some materials were shifted from one group to another, and new material groups were established.

All pressure–temperature ratings were recalculated using data from the latest edition of ASME BPVC, Section II, Part D. Annex F was added to cover pressure–temperature ratings and dimensional data for Classes 150 through 2500 flanges and Classes 150 and 300 flanged fittings in U.S. Customary units. Table and figure numbers in Annex F were prefixed by the letter F and corresponded to table and figure numbers in the main text for the metric version, with the exception of some table and figure numbers that were not used in Annex F. Of note, the flange thickness designations for Classes 150 and 300 were revised with reference to their raised faces. For these classes, the flange thickness dimensional reference planes were altered; however, required flange thickness remained unchanged. The minimum flange thickness designation was changed from C to t_f, and it did not include 2.0 mm (0.06 in.) raised face for Classes 150 and 300 raised face flanges and flanged fittings. Because of diminished interest, flanged end fittings conforming to ASME Class 400 and higher were listed only with U.S. Customary units in Annex G. In addition, straight hub welding flanges were incorporated as a new set of flanges in Classes 150 through 2500. Also, there were numerous requirement clarifications and editorial revisions. The 2003 edition was approved by ANSI on July 9, 2003, with the designation ASME B16.5-2003.

The 2009 edition added new materials, updated some pressure–temperature ratings, and designated the annexes as mandatory and nonmandatory appendices. The mandatory appendices were numbered using roman numerals, and the nonmandatory appendices were referenced using capital letters. The 2009 edition was approved by ANSI on February 19, 2009, with the designation ASME B16.5-2009.

The 2013 edition included a revision to para. 5.1 and the addition of perpendicularity tolerances. Additional errata and clarifying revisions were also applied. Following approval of the Standards Committee and ASME, approval for the 2013 edition was granted by ANSI on February 5, 2013.

The 2017 edition included the use of bar stock for blind flanges without hubs; added requirements for forgings, size NPS 22; and updated materials and working pressures.

In the 2020 edition, the U.S. Customary tables in former Mandatory Appendix II have been relocated to the main text and redesignated with a "C" suffix (e.g., Table II-2-1.1 is now Table 2-1.1C) and U.S. Customary figures have been merged with SI figures. Former Mandatory Appendix II has been deleted and the subsequent Mandatory Appendix has been redesignated. Cross-references have been updated accordingly.

Following approval by the ASME B16 Standards Committee, this revision to the 2017 edition was approved by ANSI as an American National Standard on January 5, 2021, with the new designation ASME B16.5-2020.

ASME B16 COMMITTEE
Standardization of Valves, Flanges, Fittings, and Gaskets

(The following is the roster of the Committee at the time of approval of this Standard.)

STANDARDS COMMITTEE OFFICERS

C. E. Davila, *Chair*
R. M. Bojarczuk, *Vice Chair*
C. Ramcharran, *Secretary*

STANDARDS COMMITTEE PERSONNEL

A. Appleton, Alloy Stainless Products Co., Inc.
J. E. Barker, DeZURIK, Inc.
R. W. Barnes, ANRIC Enterprises, Inc.
D. C. Bayreuther, Metso Automation, Flow Control Division
W. B. Bedesem, Consultant
R. M. Bojarczuk, ExxonMobil Research and Engineering Co.
A. M. Cheta, Qatar Shell GTL
M. A. Clark, Retired
G. A. Cuccio, Capitol Manufacturing Co.
J. D'Avanzo, Fluoroseal Valves
C. E. Davila, Crane ChemPharma and Energy
K. S. Felder, Valero Energy
D. R. Frikken, Becht Engineering Co., Inc.
J. R. Holstrom, Val-Matic Valve and Manufacturing Corp.
D. Hunt, Jr., Fastenal
G. A. Jolly, Samshin, Ltd.
E. J. Lain, Exelon Nuclear
T. A. McMahon, Emerson Process Management
R. C. Merrick, Fluor Enterprises
W. H. Patrick, The Dow Chemical Co.
D. W. Rahoi, CCM 2000
C. Ramcharran, The American Society of Mechanical Engineers
D. F. Reid, VSP Technologies
R. A. Schmidt, Canadoil
J. Sekerak, CSA Group
J. P. Tucker, Flowserve
F. Volgstadt, Volgstadt and Associates, Inc.
F. Feng, *Delegate,* China Productivity Center for Machinery
J. D. Grant, *Alternate,* DeZURIK APCO HILTON
P. V. Craig, *Contributing Member,* Jomar Group
B. G. Fabian, *Contributing Member,* Pennsylvania Machine Works
A. G. Kireta, Jr., *Contributing Member,* Copper Development Association, Inc.

SUBCOMMITTEE C — STEEL FLANGES AND FLANGED FITTINGS

A. M. Cheta, *Chair,* Qatar Shell GTL
A. Carrion, *Secretary,* The American Society of Mechanical Engineers
A. Appleton, Alloy Stainless Products Co., Inc.
W. B. Bedesem, Consultant
C. E. Davila, Crane ChemPharma and Energy
B. Dennis, Kerkau Manufacturing
J. G. Dominguez, Welding Outlets, Inc.
J. P. Ellenberger, Retired
D. R. Frikken, Becht Engineering Co., Inc.
E. Gulgun, International Standard Valve, Inc.
G. B. Hailegiorgis, AFGlobal
M. M. Haynie, Bechtel
J. R. Holstrom, Val-Matic Valve and Manufacturing Corp.
G. A. Jolly, Samshin, Ltd.
R. C. Merrick, Fluor Enterprises
W. H. Patrick, The Dow Chemical Co.
D. W. Rahoi, CCM 2000
T. V. Ramakrishnan, Forged Components, Inc.
R. A. Schmidt, Canadoil
D. E. Tezzo, Emerson Process Management
J. A. Tubb, JCM Industries, Inc.
J. P. Tucker, Flowserve
G. T. Walden, Ferguson
M. M. Zaidi, Worley

CORRESPONDENCE WITH THE B16 COMMITTEE

General. ASME Standards are developed and maintained with the intent to represent the consensus of concerned interests. As such, users of this Standard may interact with the Committee by requesting interpretations, proposing revisions or a case, and attending Committee meetings. Correspondence should be addressed to:

Secretary, B16 Standards Committee
The American Society of Mechanical Engineers
Two Park Avenue
New York, NY 10016-5990
http://go.asme.org/Inquiry

Proposing Revisions. Revisions are made periodically to the Standard to incorporate changes that appear necessary or desirable, as demonstrated by the experience gained from the application of the Standard. Approved revisions will be published periodically.

The Committee welcomes proposals for revisions to this Standard. Such proposals should be as specific as possible, citing the paragraph number(s), the proposed wording, and a detailed description of the reasons for the proposal, including any pertinent documentation.

Proposing a Case. Cases may be issued to provide alternative rules when justified, to permit early implementation of an approved revision when the need is urgent, or to provide rules not covered by existing provisions. Cases are effective immediately upon ASME approval and shall be posted on the ASME Committee web page.

Requests for Cases shall provide a Statement of Need and Background Information. The request should identify the Standard and the paragraph, figure, or table number(s), and be written as a Question and Reply in the same format as existing Cases. Requests for Cases should also indicate the applicable edition(s) of the Standard to which the proposed Case applies.

Interpretations. Upon request, the B16 Standards Committee will render an interpretation of any requirement of the Standard. Interpretations can only be rendered in response to a written request sent to the Secretary of the B16 Standards Committee.

Requests for interpretation should preferably be submitted through the online Interpretation Submittal Form. The form is accessible at http://go.asme.org/InterpretationRequest. Upon submittal of the form, the Inquirer will receive an automatic e-mail confirming receipt.

If the Inquirer is unable to use the online form, he/she may e-mail the request to the Secretary of the B16 Standards Committee at SecretaryB16@asme.org, or mail it to the above address. The request for an interpretation should be clear and unambiguous. It is further recommended that the Inquirer submit his/her request in the following format:

Subject:	Cite the applicable paragraph number(s) and the topic of the inquiry in one or two words.
Edition:	Cite the applicable edition of the Standard for which the interpretation is being requested.
Question:	Phrase the question as a request for an interpretation of a specific requirement suitable for general understanding and use, not as a request for an approval of a proprietary design or situation. Please provide a condensed and precise question, composed in such a way that a "yes" or "no" reply is acceptable.
Proposed Reply(ies):	Provide a proposed reply(ies) in the form of "Yes" or "No," with explanation as needed. If entering replies to more than one question, please number the questions and replies.
Background Information:	Provide the Committee with any background information that will assist the Committee in understanding the inquiry. The Inquirer may also include any plans or drawings that are necessary to explain the question; however, they should not contain proprietary names or information.

Requests that are not in the format described above will be rewritten in the appropriate format by the Committee prior to being answered, which may inadvertently change the intent of the original request.

Moreover, ASME does not act as a consultant for specific engineering problems or for the general application or understanding of the Standard requirements. If, based on the inquiry information submitted, it is the opinion of the Committee that the inquirer should seek assistance, the inquiry will be returned with the recommendation that such assistance be obtained.

ASME procedures provide for reconsideration of any interpretation when or if additional information that might affect an interpretation is available. Further, persons aggrieved by an interpretation may appeal to the cognizant ASME Committee or Subcommittee. ASME does not "approve," "certify," "rate," or "endorse" any item, construction, proprietary device, or activity.

Attending Committee Meetings. The B16 Standards Committee regularly holds meetings and/or telephone conferences that are open to the public. Persons wishing to attend any meeting and/or telephone conference should contact the Secretary of the B16 Standards Committee.

ASME B16.5-2020
SUMMARY OF CHANGES

Following approval by the ASME B16 Standards Committee and ASME, and after public review, ASME B16.5-2020 was approved by the American National Standards Institute on January 5, 2021.

In ASME B16.5-2020, the U.S. Customary tables formerly in Mandatory Appendix II have been relocated to the main text and redesignated with a "C" suffix, and U.S. Customary figures have been merged with SI figures. Former Mandatory Appendix II has been deleted, and the subsequent appendix redesignated. In addition, this edition includes the following changes identified by a margin note, **(20)**. The Record Numbers listed below are explained in more detail in the "List of Changes in Record Number Order" following this Summary of Changes.

Page	*Location*	*Change*
1	Section 1	Title revised *(18-808)*
1	1.1	Title and subpara. (b)(2) revised *(18-808)*
1	1.6	Revised *(18-2734)*
2	1.10	Added *(18-808)*
3	2.8.3	Revised *(11-539)*
4	4.2.2	Subparagraph (e) added *(19-2978)*
4	4.2.9	Added *(18-808)*
5	Table 1.1-1	(1) Redesignated from Table 1A (2) Revised A182 F91 to A182 F91 Type 1 *(20-887)* (3) Added A182 Gr. N08020 and A240 Gr. N08020 to Material Group 3.1, A182 Gr. N08800 and A240 Gr. N08800 to Material Group 3.6, and A182 Gr. N08810 and A240 Gr. N08810 to Material Group 3.15 *(11–540)* (4) Updated A479 Gr. N08904 to A182 Gr. N08904 *(18-2777)*
7	5.3.4	Revised *(14-2169)*
10	6.4.1	Revised *(19-520)*
10	6.4.3.2	Revised *(19-520)*
11	6.7	Revised in its entirety *(19-918)*
11	6.9.1	Revised *(19-1820)*
13	7.2	Subparagraphs (a) through (d) revised *(19-520)*
13	7.3	Subparagraphs (b), (c), and (e) revised *(19-520)*
13	7.4	Revised *(19-520)*
13	7.5	Paragraphs 7.5.1 through 7.5.3 revised *(19-520)*
14	7.6	Revised *(19-520)*
14	7.7	Paragraphs 7.7.1 and 7.7.2 revised *(19-520)*
17	Figure 6	Revised *(19-520)*
19	Figure 7	(1) Title revised *(19-918)* (2) Figure revised, General Note (1) deleted, General Note (d) added, and subsequent notes redesignated *(14-2172)*
20	Figure 8	(1) Title and figure revised *(19-918)* (2) General Notes added
22	Figure 11	Revised *(19-520)*

Page	*Location*	*Change*
22	Figure 13	Revised *(19-520)*
24	Table 2-1.1	Added A350 Gr. LF3, moved A537 CI.1 under C-Mn-Si, and revised Notes 3 and 4 (errata) *(19-629)*
46	Table 2-1.15	(1) Revised A182 F91 to A182 F91 Type 1 *(20-887)* (2) Last three rows revised *(20-887)*
47	Table 2-1.15C	(1) Former Table II-2-1.15, revised A182 F91 to A182 F91 Type 1 *(20-887)* (2) Last three rows revised *(20-887)*
50	Table 2-1.18	Note (1) revised
74	Table 2-3.1	Revised A182 Gr. N08020 and A240 Gr. N08020 *(11-540)*
74	Table 2-3.1C	Former Table II-2-3.1, revised A182 Gr. N08020 and A240 Gr. N08020 *(11-540)*
81	Table 2-3.6	Revised A182 Gr. N08800 and A240 Gr. N08800 *(11-540)*
82	Table 2-3.6C	Former Table II-2-3.1, revised A182 Gr. N08800 and A240 Gr. N08800 *(11-540)*
88	Table 2-3.10	Revised *(11-540)*
88	Table 2-3.10C	Former Table II-2-3.10, revised *(11-540)*
89	Table 2-3.11	Updated A479 Gr. N08904 to A182 Gr. N08904 *(18-2777)*
89	Table 2-3.11C	Former Table II-2-3.11, updated A479 Gr. N08904 to A182 Gr. N08904 *(18-2777)*
90	Table 2-3.12	Revised *(11-540)*
90	Table 2-3.12C	Former Table II-2-3.12, revised *(11-540)*
94	Table 2-3.15	Revised A182 Gr. N08810 and A240 Gr. N08810 *(11-540)*
95	Table 2-3.15C	Former Table II-2-3.15, revised A182 Gr. N08810 and A240 Gr. N08810 *(11-540)*
101	Table 3	(1) Third column added *(18-578)* (2) Columns 2, 3, and 4 revised *(19-520)*
102	Table 3C	(1) Former Table II-3, third column added *(18-578)* (2) Columns 2, 3, and 4 revised *(19-520)*
103	Table 4	Revised *(19-520)*
108	Table 5	(1) Revised metric values (dimensions) to align with U.S. Customary values (dimensions) *(19-520)* (2) Below Notes, Tolerance for *P* revised
115	Table 5C	(1) Former Table II-5, for pages 120 and 121, rows rearranged by errata *(20-2623)* (2) Below table Notes, negative Tolerance for *E* revised
123	Table 6	In Example (1), flange dimensions revised *(19-520)*
124	Table 6C	(1) In Note (1), "(see Example B)" corrected by errata to "(see Example 2)" *(19-520)* (2) In Example (1), flange dimensions revised *(19-917)*
125	Table 7	Revised *(19-520)*
127	Table 8	(1) Threaded illustration updated (errata) *(19-1957)* (2) Table revised *(19-520)*
130	Table 8C	(1) Former Table II-8, threaded illustration updated (errata) *(19-1957)* (2) Table revised *(19-520)*
134	Table 9	Revised *(19-520)*
140	Table 9C	Former Table II-9, revised *(19-1957)*

Page	*Location*	*Change*
143	Table 10	Revised *(19-520)*
145	Table 11	Revised *(19-520)*
152	Table 12	Revised *(19-520)*
156	Table 12C	Former Table II-12, revised *(19-1957)*
159	Table 13	Revised *(19-520)*
161	Table 14	Revised *(19-520)*
165	Table 15	Revised *(19-520)*
167	Table 16	Revised *(19-520)*
171	Table 17	Revised *(19-520)*
173	Table 18	Revised *(19-520)*
177	Table 19	Revised *(19-520)*
179	Table 20	Revised *(19-520)*
183	Table 21	Revised *(19-520)*
185	Table 22	Revised *(19-520)*
191	Mandatory Appendix II	Former Mandatory Appendix III redesignated and reference list updated *(20-983)*
231	Nonmandatory Appendix F	Added *(18-2734)*

LIST OF CHANGES IN RECORD NUMBER ORDER

Record Number	Change
11-539	Revised para. 2.8.3 to clarify “B” dimension.
11-540	Revised Table 1.1-1 (former Table 1A); added materials to Tables 2-3.1, 2-3.6, 2-3.10, 2-3.12, and 2-3.15.
14-2169	Revised reference in para. 5.3.4 to include Nonmandatory Appendix B.
14-2172	Deleted the 1:3 max. slope and the 45-deg max. angle; set a maximum limit for the straight turn; revised values between SI and U.S. Customary units; added a taper (0 deg to 7 deg) for the straight turn; revised General Note (e) for Figures 7 and 8.
18-578	Added a column in Tables 3 and 3C (former Table II-3) to clarify the requirements between maximum depth and maximum radial projection.
18-808	Added paras. 1.10 and 4.2.9 to describe B16 Cases and their uses; revised titles of section 1 and para. 1.1.
18-2734	Added Nonmandatory Appendix F; revised para. 1.6 to reference Nonmandatory Appendix F.
18-2777	Revised Tables 1.1-1 (former Table 1-A), 2-3.11, and 2-3.11C (former Table II-2-3.11), and Mandatory Appendix II (former Mandatory Appendix III).
19-520	Revised paras. 6.4, 6.4.3.2, 7.2, 7.3, 7.4, 7.5, 7.5.2, 7.6, 7.7.1, and 7.7.2; Figures 6, 11, and 13; and Tables 3 through 22 to align metric dimension with the published U.S. Customary dimension in former Mandatory Appendix II.
19-917	Revised Tables 5C, 6C, 9C, and 12C (former Tables II-5, II-6, II-9, and II-12).
19-918	Revised paras. 6.7, 6.7.1, 6.7.2, and 6.7.3 to clarify text references to Figures 7 and 8; revised titles of Figures 7 and 8.
19-1820	Revised references in para. 6.9.1.
19-2978	Added para. 4.2.2(e) to indicate that when a manufacturer marks a product with the ASTM designation, it is certifying that the material meets all the requirements of the specification marked, including heat treatment.
20-887	Revised Tables 1.1-1 (former Table 1A), 2-1.15, and 2-1.15C (former Table II-2-1.15) to include a new ASTM nomenclature material, A182 F91 Type 1, to replace A182 F91.
20-983	Revised Mandatory Appendix II (former Mandatory Appendix III) to include ASTM Specifications A993, B163, B167, and B407.

PIPE FLANGES AND FLANGED FITTINGS NPS ½ THROUGH NPS 24 METRIC/INCH STANDARD

(20) ## 1 GENERAL

(20) ### 1.1 Scope

(a) This Standard covers pressure–temperature ratings, materials, dimensions, tolerances, marking, testing, and methods of designating openings for pipe flanges and flanged fittings. Included are

(1) flanges with rating class designations 150, 300, 400, 600, 900, and 1500 in sizes NPS ½ through NPS 24 and flanges with rating class designation 2500 in sizes NPS ½ through NPS 12, with requirements given in both metric and U.S. Customary units with diameter of bolts and flange bolt holes expressed in inch units

(2) flanged fittings with rating class designation 150 and 300 in sizes NPS ½ through NPS 24, with requirements given in both metric and U.S. Customary units with diameter of bolts and flange bolt holes expressed in inch units

(3) flanged fittings with rating class designation 400, 600, 900, and 1500 in sizes NPS ½ through NPS 24 and flanged fittings with rating class designation 2500 in sizes ½ through NPS 12 that are acknowledged in Nonmandatory Appendix E in which only U.S. Customary units are provided

(b) This Standard is limited to

(1) flanges and flanged fittings made from cast or forged materials

(2) blind flanges and certain reducing flanges made from cast, forged, or plate materials (see Tables 1.1-1 through 1.1-3)

Also included in this Standard are requirements and recommendations regarding flange bolting, gaskets, and joints.

1.2 References

Codes, standards, and specifications, containing provisions to the extent referenced herein, constitute requirements of this Standard. These reference documents are listed in Mandatory Appendix II.

1.3 Time of Purchase, Manufacture, or Installation

The pressure–temperature ratings in this Standard are applicable upon its publication to all flanges and flanged fittings within its scope, which otherwise meet its requirements. For unused flanges or flanged fittings maintained in inventory, the manufacturer of the flange or flanged fittings may certify conformance to this edition, provided that it can be demonstrated that all requirements of this edition have been met. Where such components were installed in accordance with the pressure–temperature ratings of an earlier edition of this Standard, those ratings are applicable except as may be governed by the applicable code or regulation.

1.4 User Accountability

This Standard cites duties and responsibilities that are to be assumed by the flange or flanged fitting user in the areas of, for example, application, installation, system hydrostatic testing, operation, and material selection.

1.5 Quality Systems

Requirements relating to the product manufacturer's Quality System Program are described in Nonmandatory Appendix D.

1.6 Relevant Units (20)

This Standard states values in both SI (Metric) and U.S. Customary units. As an exception, diameter of bolts and flange bolt holes are expressed in inch units only. These systems of units are to be regarded separately as standard. Within the text, the U.S. Customary units are shown in parentheses or in separate tables following the SI tables. The values stated in each system are not exact equivalents; therefore, it is required that each system of units be used independently of the other. Except for diameter of bolts and flange bolt holes, combining values from the two systems constitutes nonconformance with the Standard. Nonmandatory Appendix F describes how the values expressed in SI units were established.

1.7 Selection of Materials

Criteria for selection of materials suitable for particular fluid service are not within the scope of this Standard.

1.8 Convention

For determining conformance with this Standard, the convention for fixing significant digits where limits (maximum and minimum values) are specified shall be as defined in ASTM E29. This requires that an observed

or calculated value be rounded off to the nearest unit in the last right-hand digit used for expressing the limit. Decimal values and tolerances do not imply a particular method of measurement.

1.9 Denotation

1.9.1 Pressure Rating Designation. Class, followed by a dimensionless number, is the designation for pressure–temperature ratings as follows:

Class	150	300	400	600	900	1500	2500

1.9.2 Size. NPS, followed by a dimensionless number, is the designation for nominal flange or flange fitting size. NPS is related to the reference *nominal diameter*, DN, used in international standards. The relationship is, typically, as follows:

NPS	DN
½	15
¾	20
1	25
1¼	32
1½	40
2	50
2½	65
3	80
4	100

GENERAL NOTE: For NPS ≥ 4, the related DN = 25 multiplied by the NPS number.

(20) 1.10 Cases

ASME issues Cases that are applicable to this Standard by, e.g., adding new materials or alternative construction requirements. The Cases

(a) modify the requirements of this Standard.

(b) are applicable from their issue dates until the Cases are annulled.

(c) may be used only when agreed to by the purchaser and the manufacturer, and when a Case has been so agreed to, the marking on the flange shall include the Case number.

2 PRESSURE–TEMPERATURE RATINGS

2.1 General

Pressure–temperature ratings are maximum allowable working gage pressures in bar units at the temperatures in degrees Celsius shown in Tables 2-1.1 through 2-3.19 for the applicable material and class designation. Tables 2-1.1C through 2-3.19C list pressure–temperature ratings using psi units for pressure at the temperature in degrees Fahrenheit. For intermediate temperatures, linear interpolation is permitted. Interpolation between class designations is not permitted.

2.2 Flanged Joints

A flanged joint is composed of separate and independent, although interrelated, components: the flanges, gasket, and bolting, which are assembled by another influence, the assembler. Proper controls must be exercised in the selection and application for all these elements to attain a joint that has acceptable leak tightness. Special techniques, such as controlled bolt tightening, are described in ASME PCC-1.

2.3 Ratings of Flanged Joints

2.3.1 Basis. Pressure–temperature ratings apply to flanged joints that conform to the limitations on bolting in para. 5.3 and on gaskets in para. 5.4, which are made up in accordance with good practice for alignment and assembly (see para. 2.2). Use of these ratings for flanged joints not conforming to these limitations is the responsibility of the user.

2.3.2 Mixed Flanged Joints. If the two flanges in a flanged joint do not have the same pressure–temperature rating, the rating of the joint at any temperature is the lower of the two flange ratings at that temperature.

2.4 Rating Temperature

The temperature shown for a corresponding pressure rating is the temperature of the pressure-containing shell of the component. In general, this temperature is the same as that of the contained fluid. Use of a pressure rating corresponding to a temperature other than that of the contained fluid is the responsibility of the user, subject to the requirements of applicable codes and regulations. For any temperature below −29°C (−20°F), the rating shall be no greater than the rating shown for −29°C (−20°F) (see also paras. 2.5.3 and 5.1.2).

2.5 Temperature Considerations

2.5.1 General. Use of flanged joints at either high or low temperatures shall take into consideration the risk of joint leakage due to forces and moments developed in the connected piping or equipment. Provisions in paras. 2.5.2 and 2.5.3 are included as advisory with the aim of lessening these risks.

2.5.2 High Temperature. Application at temperatures in the creep range will result in decreasing bolt loads as relaxation of flanges, bolts, and gaskets takes place. Flanged joints subjected to thermal gradients may likewise be subject to decreasing bolt loads. Decreased bolt loads diminish the capacity of the flanged joint to sustain loads effectively without leakage. At temperatures above 200°C (400°F) for Class 150 and above 400°C (750°F) for other class designations, flanged joints may

develop leakage problems unless care is taken to avoid imposing severe external loads, severe thermal gradients, or both.

2.5.3 Low Temperature. Some of the materials listed in Tables 1.1-1 and 1.1-2, notably some carbon steels, may undergo a decrease in ductility when used at low temperatures to such an extent as to be unable to safely resist shock loading, sudden changes of stress, or high stress concentration. Some codes or regulations may require impact testing for applications even where temperatures are higher than −29°C (−20°F). When such requirements apply, it is the responsibility of the user to ensure these requirements are communicated to the manufacturer prior to the time of purchase.

2.6 System Hydrostatic Testing

Flanged joints and flanged fittings may be subjected to system hydrostatic tests at a pressure of 1.5 times the 38°C (100°F) rating rounded off to the next higher 1 bar (25 psi) increment. Testing at any higher pressure is the responsibility of the user, taking into account the requirements of the applicable code or regulation.

2.7 Welding Neck Flanges

Ratings for welding neck flanges covered by this Standard are based upon their hubs at the welding end having thickness at least equal to that calculated for pipe having 276 MPa (40,000 psi) specified minimum yield strength.[1] In order to ensure adequate flange hub thickness for flange sizes NPS 2 and larger, the bore of a welding neck flange, dimension B in the various dimensional tables, shall not exceed B_{max} determined as follows:

$$B_{max} = A_h\left(1 - \frac{C_o\, p_c}{50{,}000}\right)$$

where

A_h = tabulated hub diameter, beginning of chamfer as listed in the dimensional tables

B_{max} = maximum permissible diameter for the bore of a welding neck flange

C_o = 14.5 when p_c is expressed in bar units or 1.0 when p_c is expressed in psi units

p_c = ceiling pressure value at 38°C (100°F), Nonmandatory Appendix A, Tables A-1 and A-2

The resultant units for diameter B_{max} are the same as those entered for diameter A.

The tabulated ratings for welding neck flanges are independent of components to which they may be attached, and the pressure rating of the flange shall not be exceeded. Attachment welds should be made in accordance with the applicable code or regulation. See para. 6.7 and Figures 1 through 3 for weld end dimensional requirements.

2.8 Straight Hub Welding Flanges

2.8.1 Hub Dimensions. Straight hub welding flanges have hubs of uniform thickness (see Figure 4). Except as described in paras. 2.8.2 through 2.8.4, the straight hub welding flanges shall have dimensions and tolerances of the welding neck flanges of the same size and class set forth in Tables 8, 11, 14, 16, 18, 20, and 22 (Tables 8C, 11C, 14C, 16C, 18C, 20C, and 22C). In Figure 4 the tolerances described in section 7 are applicable.

2.8.2 Length Through Hub. The length through hub shall be 229 mm (9 in.) for NPS 4 and smaller and 305 mm (12 in.) for larger than NPS 4. Other lengths may be furnished by agreement between the end user and manufacturer.

2.8.3 Bore. The bore diameter B shall be equal to the B dimension of the welding neck flange. Other bores may be furnished by agreement between the end user and manufacturer. In no case shall the bore diameter exceed the bore of the same size and class lapped flange. (20)

2.8.4 Hub End. The standard flange shall be provided with square cut end. The end user may specify welding end preparation in accordance with para. 6.7.

2.9 Multiple Material Grades

Material for flanges and flanged fittings may meet the requirements of more than one specification or the requirements of more than one grade of a specification listed in Table 1.1-1. In either case, the pressure–temperature ratings for any of these specifications or grades may be used provided the material is marked in accordance with para. 4.2.8.

3 COMPONENT SIZE

3.1 Nominal Pipe Size

As applied in this Standard, the use of the phrase "nominal pipe size" or the designation NPS followed by a dimensionless number is for the purpose of pipe, flange, or flanged fitting end connection size identification. The number is not necessarily the same as the flange or flanged fitting inside diameter.

3.2 Reducing Fittings

Reducing fittings shall be designated by the NPS for the openings in the sequence indicated in the sketches of Figure 5.

3.3 Reducing Flanges

Reducing flanges shall be designated by the NPS for each opening. See examples in Table 6 (Table 6C), Note (4).

[1] For flanges to be attached to high strength pipe with large inside diameters resulting from thin wall sections, see MSS SP-44.

4 MARKING

4.1 General

Except as modified herein, flanges and flanged fittings shall be marked as required in MSS SP-25, except as noted in para. 4.2.

4.2 Identification Markings

4.2.1 Name. The manufacturer's name or trademark shall be applied.

(20) **4.2.2 Material.** Material shall be identified in the following way:

(a) Cast flanges and flanged fittings shall be marked with the ASTM specification,[2] grade identification symbol (letters and numbers), and the melt number or melt identification.

(b) Plate flanges, forged flanges, and flanged fittings shall be marked with the ASTM specification number and grade identification symbol.[2]

(c) A manufacturer may supplement these mandatory material indications with his trade designation for the material grade, but confusion of symbols shall be avoided.

(d) For flanges and flanged fittings manufactured from material that meets the requirements of more than one specification or grade of a specification listed in Table 1.1-1, see para. 4.2.8.

(e) Marking of the ASTM specification number or trade designation is the manufacturer's assurance that the material is in full compliance with that specification or specifications when multiple certifications apply.

4.2.3 Rating Designation. The flange or flanged fitting shall be marked with the number that corresponds to its pressure rating class designation (i.e., 150, 300, 400, 600, 900, 1500, or 2500).

4.2.4 Conformance. The designation B16 or B16.5 shall be applied to the flange or flanged fitting, preferably located adjacent to the class designation, to indicate conformance to this Standard. The use of the prefix ASME is optional.

4.2.5 Temperature. Temperature markings are not required on flanges or flanged fittings; however, if marked, the temperature shall be shown with its corresponding tabulated pressure rating for the material.

4.2.6 Size. The NPS designation shall be marked on flanges and flanged fittings. Reducing flanges and reducing flanged fittings shall be marked with the applicable NPS designations as required by paras. 3.2 and 3.3.

4.2.7 Ring Joint Flanges. The edge (periphery) of each ring joint flange shall be marked with the letter R and the corresponding ring groove number.

4.2.8 Multiple Material Marking. Material for components that meet the requirements for more than one specification or grade of a specification listed in Table 1.1-1 may, at the manufacturer's option, be marked with more than one of the applicable specification or grade symbols. These identification markings shall be placed so as to avoid confusion in identification. The multiple marking shall be in accordance with the guidelines set out in ASME Boiler and Pressure Vessel Code, Section II, Part D, Mandatory Appendix 7.

4.2.9 Case Number. When a flange or flanged fitting relies on and meets the requirements of a Case, the Case number shall be included in the markings as "Case ##." (20)

5 MATERIALS

5.1 General

(a) Materials required for flanges and flanged fittings are listed in Table 1.1-1 with the following restrictions:

(1) Plate and flat bar materials may be used only for blind flanges and reducing flanges without hubs.

(2) Flanges and flanged fittings shall be manufactured as one piece in accordance with the applicable material specification. Assembly of multiple pieces into the finished product by welding or other means is not permitted by this Standard.

(b) Each forged flange shall be finished from a part that is brought as nearly as practicable to the finished shape and size by a compressive plastic hot-working operation that consolidates the material to produce an essentially wrought structure, and shall be so processed during the operation as to cause metal flow in the direction most favorable for resisting the stress encountered in service.

(c) Recommended bolting materials are listed in Table 1.1-2 (see para. 5.3).

(d) Corresponding materials listed in Section II of the ASME Boiler and Pressure Vessel Code may be used provided that the requirements of the ASME specification are identical to or more stringent than the ASTM specification for the Grade, Class, or type of material.

5.1.1 Application. Criteria for the selection of materials are not within the scope of this Standard. The possibility of material deterioration in service should be considered by the user. Carbide phase conversion to graphite and excessive oxidation of ferritic materials, susceptibility to intergranular corrosion of austenitic materials, or grain boundary attack of nickel base alloys are among those items requiring attention. A discussion of precautionary considerations can be found in ASME B31.3,

[2] An ASME Boiler and Pressure Vessel Code, Section II specification number may be substituted for an ASTM specification number provided the requirements of the ASME specification are identical to or more stringent than the ASTM specification for the Grade, Class, or Type of material.

Table 1.1-1 List of Material Specifications (20)

Material Group No.	Nominal Designation	Pressure–Temperature Rating Table	Applicable ASTM Specifications (1)		
			Forgings	Castings	Plates
Group 1 Materials					
1.1	C–Si	2-1.1	A105	A216 Gr. WCB	A515 Gr. 70
	C–Mn–Si	2-1.1	A350 Gr. LF2	...	A516 Gr. 70
	C–Mn–Si	2-1.1	...	...	A537 Cl. 1
	C–Mn–Si–V	2-1.1	A350 Gr. LF6 Cl. 1	...	...
	3½Ni	2-1.1	A350 Gr. LF3	...	...
1.2	C–Mn–Si	2-1.2	...	A216 Gr. WCC	...
	C–Mn–Si	2-1.2	...	A352 Gr. LCC	...
	C–Mn–Si–V	2-1.2	A350 Gr. LF6 Cl. 2	...	...
	2½Ni	2-1.2	...	A352 Gr. LC2	A203 Gr. B
	3½Ni	2-1.2	...	A352 Gr. LC3	A203 Gr. E
1.3	C–Si	2-1.3	...	A352 Gr. LCB	A515 Gr. 65
	C–Mn–Si	2-1.3	...	...	A516 Gr. 65
	2½Ni	2-1.3	...	...	A203 Gr. A
	3½Ni	2-1.3	...		A203 Gr. D
	C–½Mo	2-1.3	...	A217 Gr. WC1	...
	C–½Mo	2-1.3	...	A352 Gr. LC1	...
1.4	C–Si	2-1.4	...	...	A515 Gr. 60
	C–Mn–Si	2-1.4	A350 Gr. LF1 Cl. 1	...	A516 Gr. 60
1.5	C–½Mo	2-1.5	A182 Gr. F1	...	A204 Gr. A
	C–½Mo	2-1.5	...	...	A204 Gr. B
1.7	½Cr–½Mo	2-1.7	A182 Gr. F2	...	...
	Ni–½Cr–½Mo	2-1.7	...	A217 Gr. WC4	...
	¾Ni–¾Cr–1Mo	2-1.7	...	A217 Gr. WC5	...
1.9	1¼Cr–½Mo	2-1.9	...	A217 Gr. WC6	...
	1¼Cr–½Mo–Si	2-1.9	A182 Gr. F11 CL.2	...	A387 Gr. 11 Cl. 2
1.10	2¼Cr–1Mo	2-1.10	A182 Gr. F22 Cl. 3	A 217 Gr. WC9	A387 Gr. 22 Cl. 2
1.11	C–½Mo	2-1.11	...	...	A204 Gr. C
1.13	5Cr–½Mo	2-1.13	A182 Gr. F5a	A217 Gr. C5	...
1.14	9Cr–1Mo	2-1.14	A182 Gr. F9	A217 Gr. C12	...
1.15	9Cr–1Mo–V	2-1.15	A182 Gr. F91 Type 1	A217 Gr. C12A	A387 Gr. 91 Cl. 2
1.17	1Cr–½Mo	2-1.17	A182 Gr. F12 Cl. 2	...	...
	5Cr–½Mo	2-1.17	A182 Gr. F5	...	...
1.18	9Cr–2W–V	2-1.18	A182 Gr. F92	...	...
Group 2 Materials					
2.1	18Cr–8Ni	2-2.1	A182 Gr. F304	A351 Gr. CF3	A240 Gr. 304
	18Cr–8Ni	2-2.1	A182 Gr. F304H	A351 Gr. CF8	A240 Gr. 304H
2.2	16Cr–12Ni–2Mo	2-2.2	A182 Gr. F316	A351 Gr. CF3M	A240 Gr. 316
	16Cr–12Ni–2Mo	2-2.2	A182 Gr. F316H	A351 Gr. CF8M	A240 Gr. 316H
	18Cr–13Ni–3Mo	2-2.2	A182 Gr. F317	...	A240 Gr. 317
	19Cr–10Ni–3Mo	2-2.2	...	A351 Gr. CG8M	...
2.3	18Cr–8Ni	2-2.3	A182 Gr. F304L	...	A240 Gr. 304L
	16Cr–12Ni–2Mo	2-2.3	A182 Gr. F316L	...	A240 Gr. 316L
	18Cr–13Ni–3Mo	2-2.3	A182 Gr. F317L	...	...
2.4	18Cr–10Ni–Ti	2-2.4	A182 Gr. F321	...	A240 Gr. 321
	18Cr–10Ni–Ti	2-2.4	A182 Gr. F321H	...	A240 Gr. 321H

Table 1.1-1 List of Material Specifications (Cont'd)

Material Group No.	Nominal Designation	Pressure–Temperature Rating Table	Applicable ASTM Specifications (1)		
			Forgings	Castings	Plates
Group 2 Materials (Cont'd)					
2.5	18Cr–10Ni–Cb	2-2.5	A182 Gr. F347	...	A240 Gr. 347
	18Cr–10Ni–Cb	2-2.5	A182 Gr. F347H	...	A240 Gr. 347H
	18Cr–10Ni–Cb	2-2.5	A182 Gr. F348	...	A240 Gr. 348
	18Cr–10Ni–Cb	2-2.5	A182 Gr. F348H	...	A240 Gr. 348H
2.6	23Cr–12Ni	2-2.6	...	...	A240 Gr. 309H
2.7	25Cr–20Ni	2-2.7	A182 Gr. F310	...	A240 Gr. 310H
2.8	20Cr–18Ni–6Mo	2-2.8	A182 Gr. F44	A351 Gr. CK3MCuN	A240 Gr. S31254
	22Cr–5Ni–3Mo–N	2-2.8	A182 Gr. F51	...	A240 Gr. S31803
	25Cr–7Ni–4Mo–N	2-2.8	A182 Gr. F53	...	A240 Gr. S32750
	24Cr–10Ni–4Mo–V	2-2.8	...	A995 Gr. CE8MN	...
	25Cr–5Ni–2Mo–3Cu–N	2-2.8	...	A995 Gr. CD4MCuN	...
	25Cr–7Ni–3.5Mo–W–Cb	2-2.8	...	A995 Gr. CD3MWCuN	...
	25Cr–7.5Ni–3.5Mo–N–Cu–W	2-2.8	A182 Gr. F55	...	A240 Gr. S32760
2.9	23Cr–12Ni	2-2.9	...	...	A240 Gr. 309S
	25Cr–12Ni	2-2.9	...	...	A240 Gr. 310S
2.10	25Cr–12Ni	2-2.10	...	A351 Gr. CH8	...
	25Cr–12Ni	2-2.10	...	A351 Gr. CH20	...
2.11	18Cr–10Ni–Cb	2-2.11	...	A351 Gr. CF8C	...
2.12	25Cr–20Ni	2-2.12	...	A351 Gr. CK20	...
Group 3 Materials					
3.1	35Ni–35Fe–20Cr–Cb	2-3.1	A182 Gr. N08020	...	A182 Gr. N08020
3.2	99.0Ni	2-3.2	B564 Gr. N02200	...	B162 Gr. N02200
3.3	99.0Ni–Low C	2-3.3	...	...	B162 Gr. N02201
3.4	67Ni–30Cu	2-3.4	B564 Gr. N04400	...	B127 Gr. N04400
3.5	72Ni–15Cr–8Fe	2-3.5	B564 Gr. N06600	...	B168 Gr. N06600
3.6	33Ni–42Fe–21Cr	2-3.6	A182 Gr. N08800	...	A182 Gr. N08800
3.7	65Ni–28Mo–2Fe	2-3.7	B462 Gr. N10665	...	B333 Gr. N10665
	64Ni–29.5Mo–2Cr–2Fe–Mn–W	2-3.7	B462 Gr. N10675	...	B333 Gr. N10675
3.8	54Ni–16Mo–15Cr	2-3.8	B462 Gr. N10276	...	B575 Gr. N10276
	60Ni–22Cr–9Mo–3.5Cb	2-3.8	B564 Gr. N06625	...	B443 Gr. N06625
	62Ni–28Mo–5Fe	2-3.8	...	...	B333 Gr. N10001
	70Ni–16Mo–7Cr–5Fe	2-3.8	...	...	B434 Gr. N10003
	61Ni–16Mo–16Cr	2-3.8	...	...	B575 Gr. N06455
	42Ni–21.5Cr–3Mo–2.3Cu	2-3.8	B564 Gr. N08825	...	B424 Gr. N08825
	55Ni–21Cr–13.5Mo	2-3.8	B462 Gr. N06022	...	B575 Gr. N06022
	55Ni–23Cr–16Mo–1.6Cu	2-3.8	B462 Gr. N06200	...	B575 Gr. N06200
3.9	47Ni–22Cr–9Mo–I8Fe	2-3.9	B572 Gr. N06002	...	B435 Gr. N06002
	21Ni–30Fe–22Cr–18Co–3Mo–3W	2-3.9	B572 Gr. R30556	...	B435 Gr. R30556
3.10	25Ni–47Fe–21Cr–5Mo	2-3.10	...	...	B599 Gr. N08700
3.11	44Fe–25Ni–21Cr–Mo	2-3.11	A182 Gr. N08904	...	A240 Gr. N08904
3.12	26Ni–43Fe–22Cr–5Mo	2-3.12	...	...	B620 Gr. N08320
	47Ni–22Cr–20Fe–7Mo	2-3.12	...	...	B582 Gr. N06985
	46Fe–24Ni–21Cr–6Mo–Cu–N	2-3.12	A182 Gr. N08367	A351 Gr. CN3MN	B688 Gr. N08367
	46Fe–24Ni–21Cr–6Mo–Cu–N	2-3.12	B462 Gr. N08367	A351 Gr. CN3MN	B688 Gr. N08367
3.13	49Ni–25Cr–18Fe–6Mo	2-3.13	...	...	B582 Gr. N06975
	Ni–Fe–Cr–Mo–Cu–Low C	2-3.13	B564 Gr. N08031	...	B625 Gr. N08031

Table 1.1-1 List of Material Specifications (Cont'd)

Material Group No.	Nominal Designation	Pressure–Temperature Rating Table	Applicable ASTM Specifications (1)		
			Forgings	Castings	Plates
Group 3 Materials (Cont'd)					
3.14	47Ni–22Cr–19Fe–6Mo	2-3.14	...	...	B582 Gr. N06007
	40Ni–29Cr–15Fe–5Mo	2-3.14	B462 Gr. N06030	...	B582 Gr. N06030
	58Ni–33Cr–8Mo	2-3.14	B462 Gr. N06035	...	B575 Gr. N06035
3.15	42Ni–42Fe–21Cr	2-3.15	A182 Gr. N08810	...	A240 Gr. N08810
	42Ni–42Fe–21Cr	2-3.15	B564 Gr. N08810	...	B409 Gr. N08810
3.16	35Ni–19Cr–1¼Si	2-3.16	B511 Gr. N08330	...	B536 Gr. N08330
3.17	29Ni–20.5Cr–3.5Cu–2.5Mo	2-3.17	...	A351 Gr. CN7M	...
3.19	57Ni–22Cr–14W–2Mo–La	2-3.19	B564 Gr. N06230	...	B435 Gr. N06230

GENERAL NOTES:

(a) For temperature limitations, see notes in Tables 2-1.1C through 2-3.17C.

(b) Plate materials are listed only for use as blind flanges and reducing flanges without hubs (see para. 5.1). Additional plate materials listed in ASME B16.34 may also be used with corresponding B16.34, Standard Class ratings.

NOTE: (1) ASME Boiler and Pressure Vessel Code, Section II materials may also be used, provided the requirements of the ASME specification are identical to or more stringent than the corresponding ASTM specification for the Grade, Class, or Type listed.

Nonmandatory Appendix F; Section II, Part D, Nonmandatory Appendix A; and Section III, Division 1, Nonmandatory Appendix W of the ASME Boiler and Pressure Vessel Code.

5.1.2 Toughness. Some of the materials listed in Table 1.1-1 undergo a decrease in toughness when used at low temperatures, to the extent that Codes referencing the Standard may require impact tests for application even at temperatures higher than −7°C (+20°F). It is the responsibility of the user to ensure that such testing is performed.

5.1.3 Responsibility. When service conditions dictate the implementation of special material requirements [e.g., using a Group 2 material above 538°C (1,000°F)], it is the user's responsibility to so specify to the manufacturer in order to ensure compliance with metallurgical requirements listed in the notes in Tables 2-1.1 through 2-3.19 (Tables 2-1.1C through 2-3.19C).

5.1.4 Cast Surfaces. Cast surfaces of component pressure boundaries shall be in accordance with MSS SP-55, except that all Type I defects are unacceptable, and defects in excess of Plates "a" and "b" for Type II through Type XII are unacceptable.

5.2 Mechanical Properties

Mechanical properties shall be obtained from test specimens that represent the final heat-treated condition of the material required by the material specification.

5.3 Bolting

5.3.1 General. Bolting listed in Table 1.1-2 is recommended for use in flanged joints covered by this Standard. Bolting of other material may be used if permitted by the applicable code or government regulation. Bolting materials are subject to the limitations given in paras. 5.3.2 through 5.3.5.

5.3.2 High-Strength Bolting. Bolting materials having allowable stresses not less than those for ASTM A193 Grade B7 are listed as high strength in Table 1.1-2. These and other materials of comparable strength may be used in any flanged joint.

5.3.3 Intermediate-Strength Bolting. Bolting materials listed as intermediate strength in Table 1.1-2, and other bolting of comparable strength, may be used in any flanged joint provided the user verifies their ability to seat the selected gasket and maintain a sealed joint under expected operating conditions.

5.3.4 Low-Strength Bolting. Bolting materials having no more than 206 MPa (30 ksi) specified minimum yield strength are listed as low strength in Table 1.1-2. These materials and others of comparable strength are to be used only in Class 150 and 300 flanged joints (see para. 5.4.2 and Nonmandatory Appendix B). Flanged assemblies using low-strength carbon steel bolts should not be used above 200°C (400°F) or below −29°C (−20°F). (20)

5.3.5 Bolting to Gray Cast Iron Flanges. The following recommendations are made in recognition of the low ductility of gray cast iron:

(a) Alignment of flange faces is essential, along with control of assembly bolt torque, so as not to overstress the cast iron flanges. Care must also be exercised to ensure that piping loads transmitted to cast iron flanges are controlled, taking into account its lack of ductility and recognizing that cast iron flanges should not be used where suddenly applied loads such as rapid pressure fluctuation may occur.

(b) Where Class 150 steel flanges are bolted to Class 125 cast iron flanges, the gaskets should be made of Nonmandatory Appendix B, Table B-1, Group No. Ia materials, the steel flanges should have flat faces, and

(1) low-strength bolting within the limitations of para. 5.3.4 should be used with ring gaskets extending to the bolt holes or

(2) bolting of low (para. 5.3.4), intermediate (para. 5.3.3), or high (para. 5.3.2) strength may be used with full face gaskets extending to the outside diameters of the flanges

(c) Where Class 300 steel flanges are bolted to Class 250 cast iron flanges, the gaskets should be made of Nonmandatory Appendix B, Table B-1, Group No. Ia materials

(1) low-strength bolting within the limitations of para. 5.3.4 should be used with gaskets extending to the bolt holes and with the flanges having either raised or flat faces or

(2) bolting of low (para. 5.3.4), intermediate (para. 5.3.3), or high (para. 5.3.2) strength may be used with full face gaskets extending to the outside diameters of the flanges and with both the Class 300 steel and Class 250 cast iron flanges having flat faces

5.4 Gaskets

5.4.1 General. Ring joint gasket materials shall conform to ASME B16.20. Materials for other gaskets are described in Nonmandatory Appendix B. The user is responsible for selection of gasket materials that will withstand the expected bolt loading without injurious crushing and that are suitable for the service conditions. Particular attention should be given to gasket selection if a system hydrostatic test approaches or exceeds the test pressure specified in para. 2.6.

5.4.2 Gaskets for Low-Strength Bolting. If bolting listed as low strength in Table 1.1-2 is used, gaskets shown in Nonmandatory Appendix B, Table B-1, Group No. Ia are recommended.

5.4.3 Gaskets for Class 150 Flanged Joints. It is recommended that only Nonmandatory Appendix B, Table B-1, Group No. I gaskets be used for Class 150 flanged joints. When the ring joint or spiral wound gasket is selected, it is recommended that line flanges be of the welding neck or lapped joint type.

6 DIMENSIONS

6.1 Flanged Fittings Wall Thickness

6.1.1 Minimum Wall Thickness. For inspection purposes, the minimum wall thickness, t_m, of flanged fittings at the time of manufacture shall be as shown in Tables 9 and 12 (Tables 9C and 12C), except as provided in para. 6.1.2. The additional metal thickness needed to withstand installation bolt-up assembly stresses, shapes other than circular, and stress concentrations must be determined by the manufacturer, since these factors vary widely. In particular, 45-deg laterals, true Ys, and crosses may require additional reinforcement to compensate for inherent weaknesses in these shapes.

6.1.2 Fitting Local Areas. Local areas having less than minimum wall thickness are acceptable, provided that all of the following conditions are satisfied:

(a) The area of subminimum thickness can be enclosed by a circle whose diameter is no greater than $0.35\sqrt{dt_m}$, where d is the tabulated fitting inside diameter, and t_m is the minimum wall thickness as shown in the tables listed in para. 6.1.1.

(b) Measured thickness is not less than $0.75t_m$.

(c) Enclosure circles are separated from each other by an edge-to-edge distance of more than $1.75\sqrt{dt_m}$.

6.2 Fitting Center-to-Contact Surface and Center-to-End

6.2.1 Design. A principle of design in this Standard is to maintain a fixed position for the flange edge with reference to the body of the fitting. In case of raised face flanged fittings, the outside edge of the flange includes the raised face (see para. 6.4).

6.2.2 Standard Fittings. Center-to-contact surface, center-to-flange edge, and center-to-end (ring joint) dimensions are shown in Tables 9 and 12 (Tables 9C and 12C).

6.2.3 Reducing Fittings. Center-to-contact surface or center-to-flange edge dimensions for all openings shall be the same as those of straight size fittings of the largest opening. The contact surface-to-contact surface or flange edge-to-flange edge dimensions for all combinations of reducers and eccentric reducers shall be as listed for the larger opening.

6.2.4 Side Outlet Fittings. Side outlet elbows, tees, and crosses shall have all openings on intersecting centerlines, and the center-to-contact surface dimensions of the side outlet shall be the same as for the largest opening. Long radius elbows with one side outlet shall have the side outlet on the radial centerline of the elbow, and the center-to-contact surface dimension of the side outlet shall be the same as for the regular 90-deg elbow of the largest opening.

Table 1.1-2 List of Bolting Specifications: Applicable ASTM Specifications

Bolting Materials (1)											
High Strength (2)			Intermediate Strength (3)			Low Strength (4)			Nickel and Special Alloy (5)		
Spec. No.	Grade	Notes	Spec. No.	Grade	Notes	Spec. No.	Grade	Notes	Spec. No.	Grade	Notes
A193	B7	...	A193	B5	...	A193	B8 Cl. 1	(6)	B164	...	(7)–(9)
A193	B16	...	A193	B6	...	A193	B8C Cl. 1	(6)	...	...	...
		...	A193	B6X	...	A193	B8M Cl. 1	(6)	B166	...	(7)–(9)
A320	L7	(10)	A193	B7M	...	A193	B8T Cl. 1	(6)	...	...	...
A320	L7A	(10)									
A320	L7B	(10)	A193	B8 Cl. 2	(11)	A193	B8A	(6)	B335	N10665	(7)
										N10675	(7)
			A193	B8 Cl. 2B	(11)						
A320	L7C	(10)	A193	B8C Cl. 2	(11)	A193	B8CA	...			
A320	L43	(10)	A193	B8M Cl. 2	(11)	A193	B8MA	...	B408	...	(7)–(9)
			A193	B8M Cl. 2B	(11)						
			A193	B8T Cl. 2	(11)	A193	B8TA	(6)			
A354	BC	...							B473	...	(7)
A354	BD	...	A320	B8 Cl. 2	(11)	A307	B	(12)			
			A320	B8C Cl. 2	(11)				B574	...	(7)
A540	B21	...	A320	B8F Cl. 2	(11)	A320	B8 Cl. 1	(6)			
A540	B22	...	A320	B8M Cl. 2	(11)	A320	B8C Cl. 1	(6)			
A540	B23	...	A320	B8T Cl. 2	(11)	A320	B8M Cl. 1	(6)			
A540	B24	...				A320	B8T Cl. 1	(6)			
			A449		(13)						
			A453	651	(14)						
			A453	660	(14)						

GENERAL NOTES:

(a) Bolting material shall not be used beyond temperature limits specified in the governing code.

(b) ASME Boiler and Pressure Vessel Code, Section II materials may also be used, provided the requirements of the ASME specification are identical or more stringent than the corresponding ASTM specification for the Grade, Class, or Type listed.

NOTES:

(1) Repair welding of bolting material is prohibited.

(2) These bolting materials may be used with all listed materials and gaskets.

(3) These bolting materials may be used with all listed materials and gaskets, provided it has been verified that a sealed joint can be maintained under rated working pressure and temperature.

(4) These bolting materials may be used with all listed materials but are limited to Class 150 and Class 300 joints. See para. 5.3.4 for recommended gasket practices.

(5) These materials may be used as bolting with comparable nickel and special alloy parts.

(6) This austenitic stainless material has been carbide solution treated but not strain hardened. Use A194 nuts of corresponding material.

(7) Nuts may be machined from the same material or of a compatible grade of ASTM A194.

(8) Maximum operating temperature is arbitrarily set at 260°C (500°F), unless the material has been annealed, solution annealed, or hot finished, because hard temper adversely affects design stress in the creep rupture range.

(9) Forging quality is not permitted unless the producer who heats or works these parts last tests them as required for other permitted conditions in the same specification and certifies their final tensile, yield, and elongation properties to equal or exceed the requirements for one of the other permitted conditions.

(10) This ferritic material is intended for low temperature service. Use A194 Gr. 4 or Gr. 7 nuts.

(11) This austenitic stainless material has been carbide solution treated and strain hardened. Use A194 nuts of corresponding material.

(12) This carbon steel fastener shall not be used above 200°C (400°F) or below −29°C (−20°F) [see also Note (4)]. Bolts with drilled or undersized heads shall not be used.

(13) Acceptable nuts for use with quenched and tempered bolts are A194 Gr. 2 or Gr. 2H. Mechanical property requirements for studs shall be the same as those for bolts.

(14) This special alloy is intended for high-temperature service with austenitic stainless steel.

6.2.5 Special Degree Elbows. Special degree elbows ranging from 1 deg to 45 deg, inclusive, shall have the same center-to-contact surface dimensions as 45-deg elbows, and those over 45 deg and up to 90 deg, inclusive, shall have the same center-to-contact surface dimensions as 90-deg elbows. The angle designation of an elbow is its deflection from straight line flow and is also the angle between the flange faces.

6.3 Flat Face Flanges

6.3.1 General. This Standard permits flat face flanges in all classes.

6.3.2 Conversion. A raised face may be removed from a raised face flange to convert it to a flat face flange, provided that the required dimension, t_f, shown in Figure 6 is maintained.

6.3.3 Facing. The flat face flange facing finish shall be in conformance with para. 6.4.5 for the full width of the seating surface for the gasket.

6.4 Flange Facings

(20) **6.4.1 General.** Figure 6 shows dimensional relationships for various flange types and pipe lap facings to be used with lap joints. Table 4 (Table 4C) lists dimensions for facings other than ring joint. Table 5 (Table 5C) lists dimensions for ring joint facings. Classes 150 and 300 pipe flanges and companion flanges of fittings are regularly furnished with 1.5 mm (0.06 in.) raised face, which is in addition to the minimum flange thickness, t_f. Classes 400, 600, 900, 1500, and 2500 pipe flanges and companion flanges of fittings are regularly furnished with 6.4 mm (0.25 in.) raised face, which is in addition to the minimum flange thickness, t_f.

6.4.2 Other Than Lapped Joints. For joints other than lapped joints, the requirements of paras. 6.4.2.1 and 6.4.2.2 shall apply.

6.4.2.1 Raised Face and Tongue Face. In the case of flanges having raised face, tongue, or male face, the minimum flange thickness, t_f, shall be provided, and then the raised face, tongue, or male face shall be added thereto.

6.4.2.2 Grooves. For flanges that have a ring joint, groove, or female face, the minimum flange thickness shall first be provided and then sufficient thickness added thereto so that the bottom of the ring joint groove, or the contact face of the groove or female face, is in the same plane as the flange edge of a full thickness flange.

6.4.3 Lapped Joint Flanges. Lapped joint flanges shall be furnished with flat faces as illustrated in Tables 8, 11, 14, 16, 18, 20, and 22 (Tables 8C, 11C, 14C, 16C, 18C, 20C, and 22C). Lap joint stub ends shall be in accordance with Figure 6 and paras. 6.4.3.1 through 6.4.3.3.

6.4.3.1 Raised Face. The finished thickness of the lap shall be no less than nominal pipe wall thickness.

6.4.3.2 Large Male and Female. The finished height of the male face shall be the greater of the wall thickness of the pipe used or 6.4 mm (0.25 in.). The thickness of lap that remains after machining the female face shall be no less than the nominal wall thickness of pipe used. (20)

6.4.3.3 Tongue and Groove. The thickness of the lap remaining after machining the tongue or groove face shall be no less than the nominal wall thickness of the pipe used.

6.4.3.4 Ring Joint. The thickness of the lap remaining after machining the ring groove shall be no less than the nominal wall thickness of pipe used.

6.4.3.5 Lap Joint Facing Outside Diameters. The outside diameters of the lap for ring joints are shown in Table 5 (Table 5C), dimension *K*. The outside diameters of laps for large female, large tongue and groove, and small tongue and groove are shown in Table 4 (Table 4C). Small male and female facings for lapped joints are not covered by this Standard.

6.4.4 Blind Flanges. Blind flanges need not be faced in the center if, when this center part is raised, its diameter is at least 25 mm (1 in.) smaller than the inside diameter of fittings of the corresponding pressure class, as given in Tables 9 and 12 (Tables 9C and 12C) or 25 mm (1 in.) smaller than the mating pipe inside diameter. When the center part is depressed, its diameter shall not be greater than the inside diameter of the corresponding pressure class fittings, as given in Tables 9 and 12 (Tables 9C and 12C). Machining of the depressed center is not required.

6.4.5 Flange Facing Finish. Flange facing finishes shall be in accordance with paras. 6.4.5.1 through 6.4.5.3, except that other finishes may be furnished by agreement between the user and the manufacturer. The finish of the gasket contact faces shall be judged by visual comparison with Ra standards (see ASME B46.1) and not by instruments having stylus tracers and electronic amplification.

6.4.5.1 Tongue and Groove and Small Male and Female. The gasket contact surface finish shall not exceed 3.2 μm (125 μin.) roughness.

6.4.5.2 Ring Joint. The side wall surface finish of the gasket groove shall not exceed 1.6 μm (63 μin.) roughness.

6.4.5.3 Other Flange Facings. Either a serrated concentric or serrated spiral finish having a resultant surface finish from 3.2 μm to 6.3 μm (125 μin. to 250 μin.) average roughness shall be furnished. The cutting tool employed should have an approximate 1.5 mm (0.06 in.) or larger radius, and there should be from 1.8 grooves/mm through 2.2 grooves/mm (45 grooves/in. through 55 grooves/in.).

6.4.6 Flange Facing Finish Imperfections. Imperfections in the flange facing finish shall not exceed the dimensions shown in Table 3 (Table 3C). A distance of at least four times the maximum radial projection shall separate adjacent imperfections. A radial projection shall be measured by the difference between an outer radius and inner radius encompassing the imperfection where the radii are struck from the centerline of the bore. Imperfections less than half the depth of the serrations shall not be considered cause for rejection. Protrusions above the serrations are not permitted.

6.5 Flange Bolt Holes

Bolt holes are in multiples of four. Bolt holes shall be equally spaced, and pairs of bolt holes shall straddle fitting centerlines.

6.6 Bolting Bearing Surfaces

Flanges and flanged fittings shall have bearing surfaces for bolting that are parallel to the flange face within 1 deg. Any back facing or spot facing shall not reduce the flange thickness, t_f, below the dimensions given in Tables 8, 9, 11, 12, 14, 16, 18, 20, and 22 (Tables 8C, 9C, 11C, 12C, 14C, 16C, 18C, 20C, and 22C). Spot facing or back facing shall be in accordance with MSS SP-9.

(20) 6.7 Welding Neck Flanges Hub and Welding End Profiles

6.7.1 Welding End Profiles. Welding end profiles are illustrated in Figures 1 through 3 and Figures 7 through 10. Other welding end profiles furnished by agreement between the purchaser and manufacturer shall not invalidate compliance with this Standard.

6.7.2 Hubs. Acceptable profiles of the hub from the welding end to the back of the flange are shown in Figures 1, 3, 7, and 8.

6.7.3 Bores. Straight-through bores shown in Figures 7 and 8 are required unless the special conditions illustrated in Figures 2, 3, 9, and 10 are furnished by agreement between the purchaser and manufacturer.

6.8 Reducing Flanges

6.8.1 Drilling, Outside Diameter, Thickness, and Facing Dimensions. Flange drilling, outside diameter, thickness, and facing are the same as those of the standard flange of the size from which the reduction is being made.

6.8.2 Hub Dimensions

6.8.2.1 Threaded, Socket Weld, and Slip-On Flanges. The hub dimension shall be at least as large as those of the standard flange of the size to which the reduction is being made. The hub may be larger or omitted as detailed in Table 6 (Table 6C).

6.8.2.2 Welding Neck Flanges. The hub dimensions shall be the same as those of the standard flange of the size to which the reduction is being made.

6.9 Threaded Flanges

6.9.1 Thread Dimensions. Except as provided in Note (3) of Figure 6 and Note (1) of Table 4 (Table 4C), threaded flanges shall have a taper pipe thread conforming to ASME B1.20.1. The thread shall be concentric with the axis of the flange opening, and variations in alignment (perpendicularity with reference to the flange face) shall not exceed 5 mm/m (0.06 in./ft). (20)

6.9.2 Threads for Class 150 Flanges. Class 150 flanges are made without a counterbore. The threads shall be chamfered approximately to the major diameter of the thread at the back of the flange at an angle of approximately 45 deg with the axis of the thread. The chamfer shall be concentric with the thread and shall be included in the measurement of the thread length.

6.9.3 Threads for Class 300 and Higher Flanges. Class 300 and higher pressure class flanges shall be made with a counterbore at the back of the flange. The threads shall be chamfered to the diameter of the counterbore at an angle of approximately 45 deg with the axis of the threads. The counterbore and chamfer shall be concentric with the thread.

6.9.4 Reducing Flange Thread Length. The minimum length of effective thread in reducing flanges shall be at least equal to dimension T of the corresponding class of threaded flange as shown in Tables 8, 9, 11, 12, 14, 16, 18, 20, and 22 (Tables 8C, 9C, 11C, 12C, 14C, 16C, 18C, 20C, and 22C). Threads do not necessarily extend to the face of the flange. See Table 6 (Table 6C) for reducing threaded flanges.

6.9.5 Thread Gaging. Internal threads of flanges shall be checked with gages having a gaging notch. Variations in threading shall be limited to one turn large or one turn small from the gaging notch when using working gages. The reference point for chamfered thread (Class 150) gaging is the starting end of the threaded flange, provided the thread chamfer does not exceed the major diameter of the internal thread. When a chamfer on the internal thread exceeds this limit, the reference point becomes the last thread scratch on this chamfer cone. The reference point for counterbored thread (Classes 300 through 2500) gaging shall be the last thread scratch on the chamfer cone.

6.9.6 Assembly Using Power Equipment. For ASME B1.20.1 external pipe threads, Annex A specifies the distance and number of turns that external pipe threads may be made longer than regular for use with the higher pressure flanges to bring the small end of

Table 1.1-3 Flange Bolting Dimensional Recommendations

Product	Carbon Steel	Alloy Steel
Stud bolts	ASME B18.31.2	ASME B18.31.2
Bolts smaller than $^3/_4$ in.	ASME B18.2.1, square or heavy hex head	ASME B18.2.1, heavy hex head
Bolts equal to or larger than $^3/_4$ in.	ASME B18.2.1, square or heavy hex head	ASME B18.2.1, heavy hex head
Nuts smaller than $^3/_4$ in.	ASME B18.2.2, heavy hex	ASME B18.2.2, heavy hex
Nuts equal to or larger than $^3/_4$ in.	ASME B18.2.2, hex or heavy hex	ASME B18.2.2, heavy hex
External threads	ASME B1.1, Cl. 2A coarse series	ASME B1.1, Cl. 2A coarse series up through 1 in.; eight thread series for larger bolts
Internal threads	ASME B1.1, Cl. 2B coarse series	ASME B1.1, Cl. 2B coarse series up through 1 in.; eight thread series for larger bolts

the thread close to the face of the flange when the parts are assembled by power equipment.

6.10 Flange Bolting Dimensions

6.10.1 Dimensional Standards. Stud bolts, threaded at both ends or threaded full length, or bolts may be used in flange joints. Dimensional recommendations for bolts, stud bolts, and nuts are shown in Table 1.1-3. See para. 5.3 for bolting material recommendations.

6.10.2 Bolt Lengths. Stud bolt lengths, including the height of two heavy hexagon nuts, are shown as dimension *L* in Tables 7, 10, 13, 15, 17, 19, and 21 (Tables 7C, 10C, 13C, 15C, 17C, 19C, and 21C). The tabulated stud bolt length *L* does not include the height of end points. An end point is defined as an unthreaded length, such as a chamfer, which extends beyond the thread. The method of calculating bolt lengths is explained in Nonmandatory Appendix C. The tabulated bolt lengths are reference dimensions. Users may select other bolting lengths.

6.10.3 Bolting Recommendations. For flange joints, stud bolts with a nut at each end are recommended for all applications and especially for high temperature service.

6.11 Gaskets for Line Flanges

6.11.1 Ring Joint. Ring joint gasket dimensions shall conform to ASME B16.20.

6.11.2 Contact Width. For flanges having large or small tongue-and-groove faces, all gaskets, except solid flat metal gaskets, shall cover the bottom of the groove with minimum clearance. [See para. 7.3(a) for tolerance applicable to groove.] Solid flat metal gaskets shall have contact width not greater than for Nonmandatory Appendix B, Group III gaskets.

6.11.3 Bearing Surface. For flanges with small male-and-female face, care must be taken to ensure that adequate bearing surface is provided for the gaskets. In particular, care is necessary when the joint is made on the end of the pipe as shown in Figure 6.

6.12 Auxiliary Connections

6.12.1 General. Auxiliary connections or openings for flanged fittings are not required unless specified by the purchaser. Welding to attach auxiliary connections to flanged fittings shall be made by a qualified welder using a qualified weld procedure in accordance with Section IX of the ASME Boiler and Pressure Vessel Code.

6.12.2 Pipe Thread Tapping. Holes may be tapped in the wall of a fitting if the metal is thick enough to allow the effective thread length specified in Figure 11. Where thread length is insufficient or the tapped hole needs reinforcement, a boss shall be added.

6.12.3 Sockets. Sockets for socket welding connections may be provided in the wall of a fitting if the metal is thick enough to afford the depth of socket and retaining wall specified in Figure 12. Where the wall thickness is insufficient, or the size of the connection requires opening reinforcement, a boss shall be added (see Figure 13).

6.12.4 Butt Welding. Connections may be attached by butt welding directly to the wall of the fitting (see Figure 14). Where the size of an opening requires reinforcement, a boss shall be added.

6.12.5 Bosses. Where bosses are required, the diameters shall be no less than those shown in Figure 13, and the height shall provide lengths as specified in Figure 11 or Figure 12.

6.12.6 Size. Unless otherwise specified, auxiliary connections shall be of the pipe sizes given below.

Fitting Size	Connection Size (NPS)
2 ≤ NPS ≤ 4	$^1/_2$
5 ≤ NPS ≤ 8	$^3/_4$
NPS ≥ 10	1

6.12.7 Designating Locations. The designation of locations for auxiliary connections for flanged fittings is shown in Figure 15. A letter is used to designate each location.

7 TOLERANCES

7.1 General

For the purpose of determining conformance with this Standard, the convention for fixing significant digits where limits, maximum or minimum values, are specified shall be rounded as defined in ASTM Practice E29. This requires that an observed or calculated value shall be rounded to the nearest unit in the last right-hand digit used for expressing the limit. The listing of decimal tolerances does not imply a particular method of measurement.

(20) 7.2 Center-to-Contact Surfaces and Center-to-End Tolerances

Required tolerances for various flanges and flanged fitting elements are as follows:

(a) Center-to-Contact Surfaces Other Than Ring Joint

Size	Tolerance, mm (in.)
NPS ≤ 10	±1.0 (±0.04)
NPS ≥ 12	±1.5 (±0.06)

(b) Center-to-End (Ring Joint)

Size	Tolerance, mm (in.)
NPS ≤ 10	±1.0 (±0.04)
NPS ≥ 12	±1.5 (±0.06)

(c) Contact Surface-to-Contact Surface Other Than Ring Joint

Size	Tolerance, mm (in.)
NPS ≤ 10	±2.0 (±0.08)
NPS ≥ 12	±3.0 (±0.12)

(d) End-to-End (Ring Joint)

Size	Tolerance, mm (in.)
NPS ≤ 10	±2.0 (±0.08)
NPS ≥ 12	±3.0 (±0.12)

(20) 7.3 Facings

Tolerances that apply to both flange and flanged fitting facings are as follows:

(a) Inside and outside diameter of large and small tongue and groove and female, ±0.5 mm (±0.02 in.).

(b) Outside diameter, 1.5 mm (0.06 in.) raised face, ±1.0 mm (±0.04 in.).

(c) Outside diameter, 6.4 mm (0.25 in.) raised face, ±0.5 mm (±0.02 in.).

(d) Ring joint groove tolerances are shown in Table 5 (Table 5C).

Tolerances that apply to flanges are as follows:

(e) Perpendicularity of the face with the bore

Size	Tolerance, deg
NPS ≤ 5	1
NPS ≥ 6	0.5

7.4 Flange Thickness (20)

Required tolerances for flange thickness are as follows:

Size	Tolerance, mm (in.)
NPS ≤ 18	+3.0, −0.0 (+0.12, −0.00)
NPS ≥ 20	+5.0, −0.0 (+0.20, −0.00)

The plus tolerance is applicable to bolting bearing surfaces whether as-forged, as-cast, spot-faced, or back-faced (see para. 6.6).

7.5 Welding End Flange Ends and Hubs (20)

7.5.1 Outside Diameter. Required tolerances for the nominal outside diameter dimension *A* of Figures 7 and 8 of welding ends of welding neck flanges are as follows:

Size	Tolerance, mm (in.)
NPS ≤ 5	+2.0, −1.0 (+0.08, −0.04)
NPS ≥ 6	+4.0, −1.0 (+0.16, −0.04)

7.5.2 Inside Diameter. Required tolerances for the nominal inside diameter of welding ends of welding neck flanges and smaller bore of socket welding flanges (dimension *B* in the referenced figures) are as follows:

(a) For Figures 4, 7, and 8, the tolerances are

Size	Tolerance, mm (in.)
NPS ≤ 10	±1.0 (±0.04)
12 ≤ NPS ≤ 18	±1.5 (±0.06)
NPS ≥ 20	+3.0, −1.5 (+0.12, −0.06)

(b) For Figure 9, the tolerances are

Size	Tolerance, mm (in.)
NPS ≤ 10	+0.0, −1.0 (+0.0, −0.04)
NPS ≥ 12	+0.0, −1.5 (+0.0, −0.06)

7.5.3 Backing Ring Contact Surface. Required tolerances for the bore of the backing ring contact surface of welding neck flanges, dimension *C* of Figures 9 and 10 are as follows:

Size	Tolerance, mm (in.)
2 ≤ NPS ≤ 24	+0.25, −0.0 (+0.01, −0.0)

7.5.4 Hub Thickness. Despite the tolerances specified for dimensions *A* and *B*, the thickness of the hub at the welding end shall not be less than 87½% of the nominal thickness of the pipe, having an under-tolerance of 12.5% for the pipe wall thickness to which the flange is to be attached or the minimum wall thickness as specified by the purchaser.

(20) 7.6 Length Through Hub on Welding Neck Flanges

The required tolerances for the length through hubs on welding neck flanges are as follows:

Size	Tolerance, mm (in.)
NPS ≤ 4	±1.5 (±0.06)
5 ≤ NPS ≤10	+1.5, −3.0 (+0.06, −0.12)
NPS ≥ 12	+3.0, −5.0 (+0.12, −0.20)

(20) 7.7 Flange Bore Diameter

7.7.1 Lapped and Slip-On Flange Bores. The required tolerances for lapped and slip-on flange bore diameters are as follows:

Size	Tolerance, mm (in.)
NPS ≤ 10	+1.0, −0.0 (+0.04, −0.0)
NPS ≥ 12	+1.5, −0.0 (+0.06, −0.0)

7.7.2 Counterbores, Threaded Flanges. The required tolerances for threaded flange counterbores are as follows:

Size	Tolerance, mm (in.)
NPS ≤ 10	+1.0, −0.0 (+0.04, −0.0)
NPS ≥ 12	+1.5, −0.0 (+0.06, −0.0)

7.7.3 Counterbores, Socket Welding Flanges. The required tolerance for socket end counterbores is as follows:

Size	Tolerance, mm (in.)
½ ≤ NPS ≤3	±0.25 (±0.010)

7.8 Drilling and Facing

7.8.1 Bolt Circle Diameter. The required tolerance for all bolt circle diameters is as follows:

$$\pm 1.5 \text{ mm} \ (\pm 0.06 \text{ in.})$$

7.8.2 Bolt Hole to Bolt Hole. The required tolerance for the center-to-center of adjacent bolt holes is as follows:

$$\pm 0.8 \text{ mm} \ (\pm 0.03 \text{ in.})$$

7.8.3 Bolt Circle Concentricity. The required tolerances for concentricity between the flange bolt circle diameter and machine facing diameters are as follows:

Size	Tolerance, mm (in.)
NPS ≤ 2½	0.8 (0.03)
NPS ≥ 3	1.5 (0.06)

8 PRESSURE TESTING

8.1 Flange Test

Flanges are not required to be pressure tested.

8.2 Flanged Fitting Test

8.2.1 Shell Pressure Test. Each flanged fitting shall be given a shell pressure test.

8.2.2 Test Conditions. The shell pressure test for flanged fittings shall be at a pressure no less than 1.5 times the 38°C (100°F) pressure rating rounded off to the next higher 1 bar (25 psi) increment.

8.2.3 Test Fluid. The pressure test shall be made using water, which may contain a corrosion inhibitor or kerosene as the test fluid. Other suitable test fluids may be used provided their viscosity is no greater than that of water. The test fluid temperature shall not exceed 50°C (125°F).

8.2.4 Test Duration. The test duration shall be as follows:

Fitting Size	Duration, sec
NPS ≤ 2	60
2½ ≤ NPS ≤ 8	120
NPS ≥ 10	180

8.2.5 Acceptance. No visible leakage is permitted through the pressure boundary wall.

Figure 1 Bevel for Outside Thickness

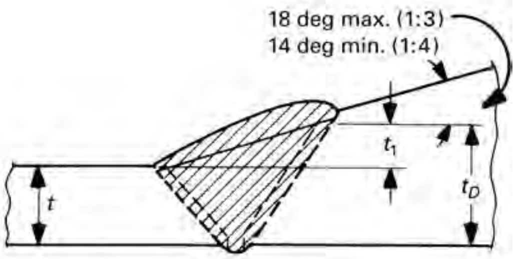

Welding Ends
(Welding Neck Flanges)
Additional Thickness for
Welding to Higher Strength Pipe

GENERAL NOTES:

(a) When the materials joined have equal minimum specified yield strength, there shall be no restriction on the minimum slope.

(b) Neither $t_1$or t_2, nor their sum $t_1 + t_2$, shall exceed 0.5t.

(c) When the minimum specified yield strengths of the sections to be joined are unequal, the value of t_D shall at least equal the mating wall thickness times the ratio of minimum specified yield strength of the pipe to minimum specified yield strength of the flange.

(d) Welding shall be in accordance with the applicable code.

Figure 2 Bevel for Inside Thickness

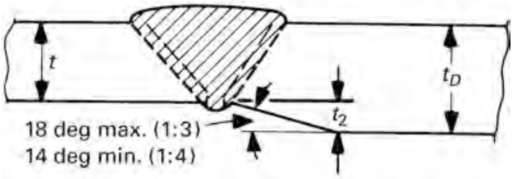

Welding Ends
(Welding Neck Flanges)
Additional Thickness for
Welding to Higher Strength Pipe

GENERAL NOTES:

(a) When the materials joined have equal minimum specified yield strength, there shall be no restriction on the minimum slope.

(b) Neither $t_1$or t_2, nor their sum $t_1 + t_2$, shall exceed 0.5t.

(c) When the minimum specified yield strengths of the sections to be joined are unequal, the value of t_D shall at least equal the mating wall thickness times the ratio of minimum specified yield strength of the pipe to minimum specified yield strength of the flange.

(d) Welding shall be in accordance with the applicable code.

Figure 3 Bevel for Combined Thickness

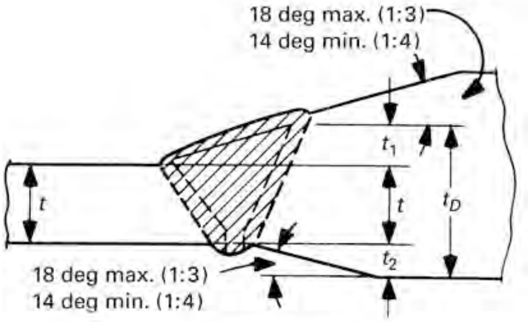

Welding Ends
(Welding Neck Flanges)
Additional Thickness for
Welding to Higher Strength Pipe

GENERAL NOTES:

(a) When the materials joined have equal minimum specified yield strength, there shall be no restriction on the minimum slope.

(b) Neither $t_1$or t_2, nor their sum $t_1 + t_2$, shall exceed 0.5t.

(c) When the minimum specified yield strengths of the sections to be joined are unequal, the value of t_D shall at least equal the mating wall thickness times the ratio of minimum specified yield strength of the pipe to minimum specified yield strength of the flange.

(d) Welding shall be in accordance with the applicable code.

Figure 4 Straight Hub Welding Flanges

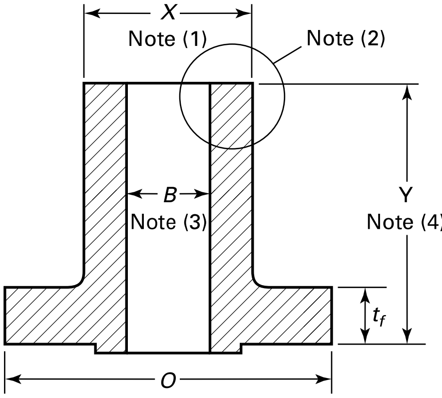

GENERAL NOTES:

(a) O = outside diameter of flange (see para. 2.8)

(b) t_f = minimum thickness of flange (see para. 2.8)

NOTES:

(1) X = diameter of hub (see para. 2.8). Tolerance +3.0 mm, −0.0 mm (+0.12 in., −0.00 in.).

(2) Hub end (see para. 2.8.4).

(3) B = bore (see paras. 2.8.3 and 7.5.2).

(4) Y = length through hub (see para. 2.8.2).

Figure 5 Method of Designating Outlets of Reducing Fittings in Specifications (Flanged Fittings)

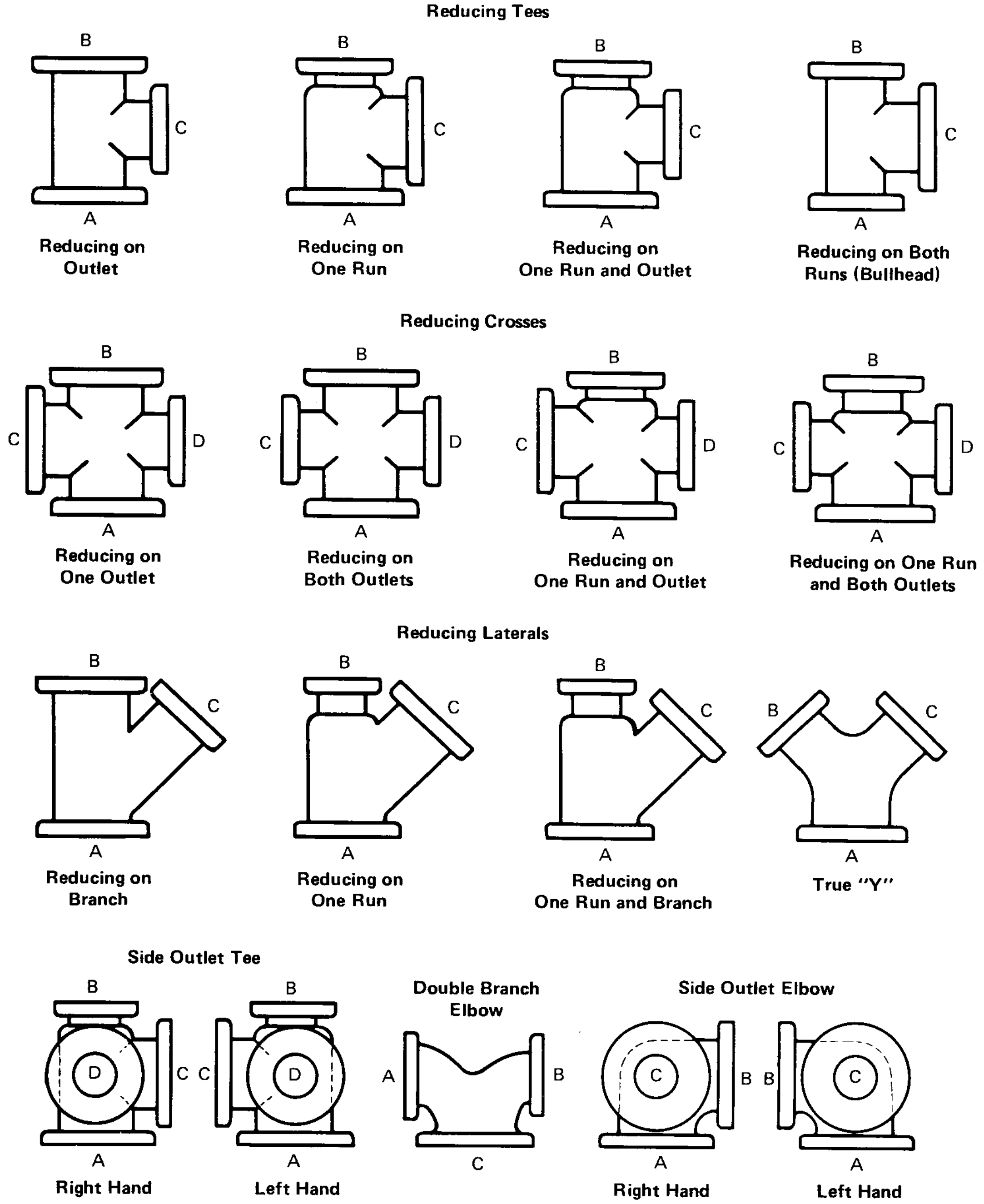

GENERAL NOTES:

(a) The largest opening establishes the basic size of a reducing fitting. The largest opening is named first, except that for bull head tees, which are reducing on both runs, and for double branch elbows where both branches are reducing, the outlet is the largest opening and named last in both cases.

(b) In designating the openings of reducing fittings, they should be read in the order indicated by the sequence of the letters A, B, C, and D. In designating the outlets of side outlet reducing fittings, the side outlet is named last, and in the case of the cross, which is not shown, the side outlet is designated by the letter E.

(c) Sketches are illustrative only and do not imply required design (see para. 3.2).

Figure 6 End Flange Facings and Their Relationship to Flange Thickness and Center-to-End and End-to-End Dimensions

(20)

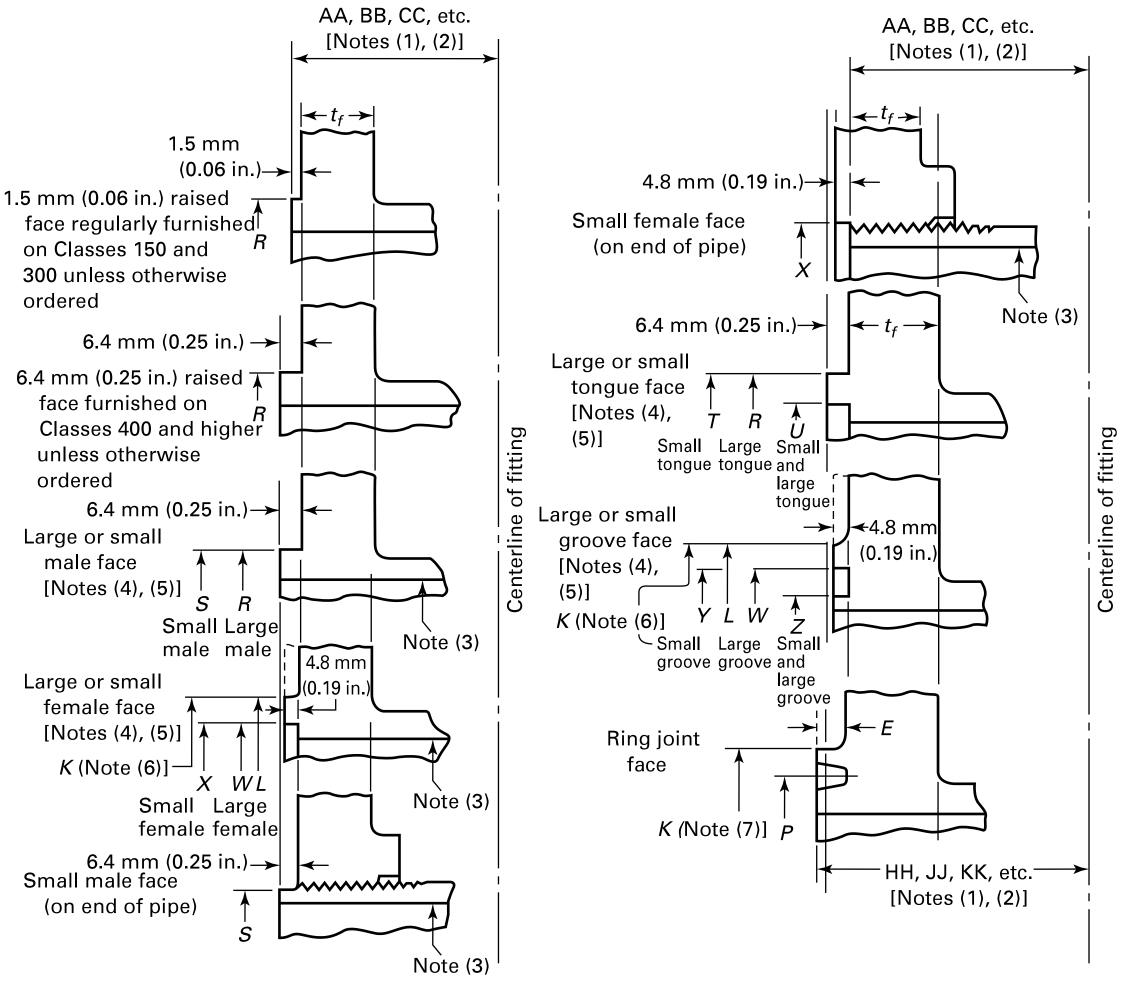

End Flange Facings
Flange Thickness and Center-to-End Dimensions
Classes 150 through 2500

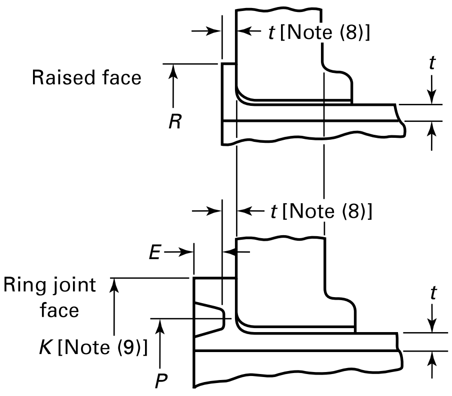

Lap Joint Stub End
Facings and Thickness
Lapped Joints

Figure 6 End Flange Facings and Their Relationship to Flange Thickness and Center-to-End and End-to-End Dimensions (Cont'd)

NOTES:
(1) See paras. 6.2 and 6.4.
(2) See Tables 7 through 22 (Tables 7C through 22C).
(3) For small male and female joints, care should be taken in the use of these dimensions to ensure that the inside diameter of the pipe fitting is small enough to permit sufficient bearing surface to prevent crushing of the gasket [see Table 4 (Table 4C)]. This applies particularly on lines where the joint is made on the end of the pipe. Threaded companion flanges for small male and female joints are furnished with plain face and threaded with American National Standard Locknut Thread (NPSL).
(4) See Table 4 (Table 4C) for dimensions of facings (other than ring joint) and Table 5 (Table 5C) for ring joint facing.
(5) Large male and female faces and large tongue and groove are not applicable to Class 150 because of potential dimensional conflicts.
(6) See Table 4 (Table 4C).
(7) See Table 5 (Table 5C).
(8) See para. 6.4.3.
(9) See para. 6.4.3.5 and Table 5 (Table 5C).

Figure 7 Welding Neck Flange Hub and Welding End Profiles for Wall Thicknesses *t* From 5 mm (0.19 in.) to 22 mm (0.88 in.) (20)

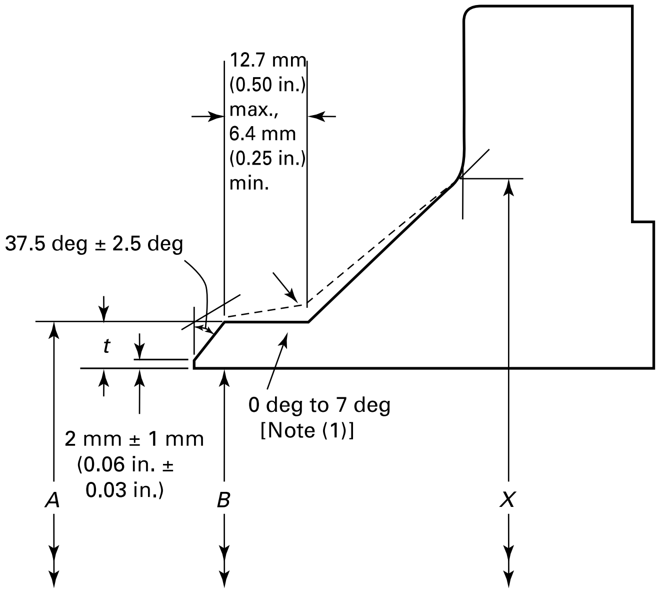

Welding Ends (Welding Neck Flanges, No Backing Rings)
A = nominal outside diameter of pipe
B = nominal inside diameter of pipe
t = nominal wall thickness of pipe
x = diameter of hub (see dimensional tables)

GENERAL NOTES:
(a) See paras. 6.7, 6.8, and 7.4 for details and tolerances.
(b) See Figures 9 and 10 for additional details of welding ends.
(c) When the thickness of the hub at the bevel is greater than that of the pipe to which the flange is joined and the additional thickness is provided on the outside diameter, a taper weld having a slope not exceeding 1 to 3 may be used, or, alternatively, the greater outside diameter may be tapered at the same maximum slope or less, from a point on the welding bevel equal to the outside diameter of the mating pipe. Similarly, when the greater thickness is provided on the inside of the flange, it shall be taper-bored from the welding end at a slope not exceeding 1 to 3. When flanges covered by this Standard are intended for services with light wall, higher strength pipe, the thickness of the hub at the bevel may be greater than that of the pipe to which the flange is joined. Under these conditions, a single taper hub may be provided. The additional thickness may be provided on either inside or outside or partially on each side, but the total additional thickness shall not exceed one-half times the nominal wall thickness of intended mating pipe (see Figures 1 through 3).
(d) For welding end dimensions, refer to ASME B16.25.

NOTE: (1) For manufacturing purposes, the straight turn from the bevel is permitted to have a taper with the angle not exceeding 7 deg.

(20) **Figure 8 Welding Neck Flange Hub and Welding End Profiles for Wall Thicknesses *t* Greater Than 22 mm (0.88 in.)**

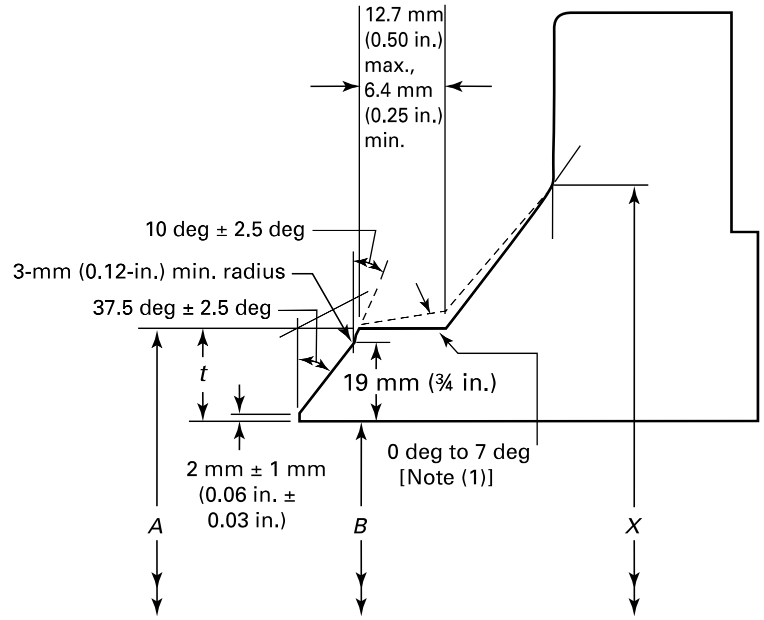

Welding Ends (Welding Neck Flanges, No Backing Rings)

A = nominal outside diameter of pipe
B = nominal inside diameter of pipe
t = nominal wall thickness of pipe
x = diameter of hub (see dimensional tables)

GENERAL NOTES:
(a) See paras. 6.7, 6.8, and 7.4 for details and tolerances.
(b) See Figures 9 and 10 for additional details of welding ends.
(c) When the thickness of the hub at the bevel is greater than that of the pipe to which the flange is joined and the additional thickness is provided on the outside diameter, a taper weld having a slope not exceeding 1 to 3 may be used, or, alternatively, the greater outside diameter may be tapered at the same maximum slope or less, from a point on the welding bevel equal to the outside diameter of the mating pipe. Similarly, when the greater thickness is provided on the inside of the flange, it shall be taper-bored from the welding end at a slope not exceeding 1 to 3. When flanges covered by this Standard are intended for services with light wall, higher strength pipe, the thickness of the hub at the bevel may be greater than that of the pipe to which the flange is joined. Under these conditions, a single taper hub may be provided. The additional thickness may be provided on either inside or outside or partially on each side, but the total additional thickness shall not exceed one-half times the nominal wall thickness of intended mating pipe (see Figures 1 through 3).
(d) For welding end dimensions, refer to ASME B16.25.

NOTE: (1) For manufacturing purposes, the straight turn from the bevel is permitted to have a taper with the angle not exceeding 7 deg.

Figure 9 Inside Contour for Use With Rectangular Backing Ring

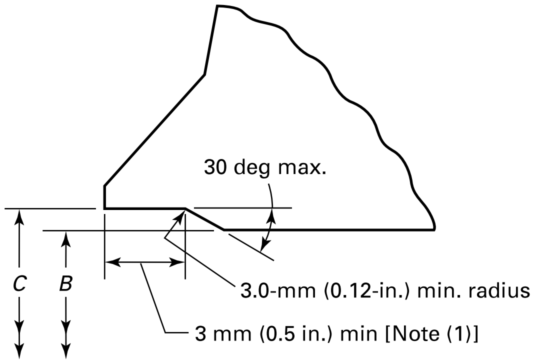

Welding Ends (Welding Neck Flanges)

(SI Units)

A = nominal outside diameter of welding end, mm
B = nominal inside diameter of pipe (− A − $2t$), mm
C = A − 0.79 − $1.75t$ − 0.25, mm
t = nominal wall thickness of pipe, mm
0.79 mm = minus tolerance on outside diameter of pipe to ASTM A106, etc.
$1.75t$ = $87\frac{1}{2}$% of nominal wall (permitted by ASTM A106, etc.) multiplied by two to convert into terms of diameter
0.25 mm = plus tolerance on diameter C, mm (see para. 7.5.3)

(U.S. Customary Units)

A = nominal outside diameter of welding end, in.
B = nominal inside diameter of pipe (− A − $2t$), in.
C = A − 0.031 − $1.75t$ − 0.010, in.
t = nominal wall thickness of pipe
0.031 in. = minus tolerance on outside diameter of pipe to ASTM A106, etc.
$1.75t$ = $87\frac{1}{2}$% of nominal wall (permitted by ASTM A106, etc.) multiplied by two to convert into terms of diameter
0.010 in. = plus tolerance on diameter C, in. (see para. 7.5.3)

GENERAL NOTES:
(a) See paras. 6.7, 6.8, and 7.5 for details and tolerances.
(b) See Figures 7 and 8 for welding end details of welding neck flanges.
(c) For dimensions, see ASME B16.25.

NOTE: (1) 13-mm (0.5-in.) depth based on use of 19-mm (0.75-in.) wide backing ring.

Figure 10 Inside Contour for Use With Taper Backing Ring

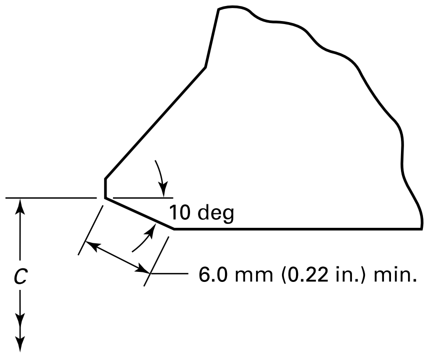

Welding Ends (Welding Neck Flanges)

(SI Units)

A = nominal outside diameter of welding end, mm
B = nominal inside diameter of pipe (− A − $2t$), mm
C = A − 0.79 − $1.75t$ − 0.25, mm
t = nominal wall thickness of pipe, mm
0.79 mm = minus tolerance on outside diameter of pipe to ASTM A106, etc.
$1.75t$ = $87\frac{1}{2}$% of nominal wall (permitted by ASTM A106, etc.) multiplied by two to convert into terms of diameter
0.25 mm = plus tolerance on diameter C, mm (see para. 7.5.3)

(U.S. Customary Units)

A = nominal outside diameter of welding end, in.
B = nominal inside diameter of pipe (− A − $2t$), in.
C = A − 0.031 − $1.75t$ − 0.010, in.
t = nominal wall thickness of pipe
0.031 in. = minus tolerance on outside diameter of pipe to ASTM A106, etc.
$1.75t$ = $87\frac{1}{2}$% of nominal wall (permitted by ASTM A106, etc.) multiplied by two to convert into terms of diameter
0.010 in. = plus tolerance on diameter C, in. (see para. 7.5.3)

GENERAL NOTES:
(a) See paras. 6.7, 6.8, and 7.5 for details and tolerances.
(b) See Figures 7 and 8 for welding end details of welding neck flanges.
(c) For dimensions, see ASME B16.25.

(20) **Figure 11 Thread Length for Connection Tapping**

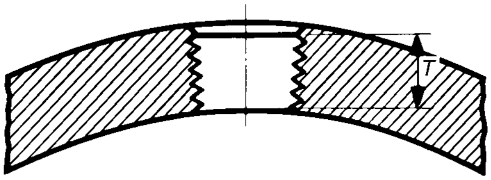

Connection Size, NPS	Thread Length, *T*, mm (in.) (1)
3/8	10.4 (0.41)
1/2	13.5 (0.53)
3/4	14.0 (0.55)
1	17.3 (0.68)
1 1/4	18.0 (0.71)
1 1/2	18.3 (0.72)
2	19.3 (0.76)

GENERAL NOTE: See paras. 6.12.2, 6.12.5, and 6.12.6.

NOTE: (1) In no case shall the effective length of thread *T* be less than that shown in the table above. These lengths are equal to the effective thread length of external pipe threads (ASME B1.20.1).

Figure 12 Socket Welding for Connections

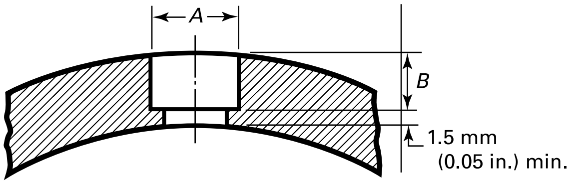

Connection Size, NPS	Minimum Diameter of Socket, *A*, mm	Minimum Depth, *B*, mm
3/8	17.5	4.8 (0.19)
1/2	21.8	4.8 (0.19)
3/4	26.9	6.4 (0.25)
1	33.8	6.4 (0.25)
1 1/4	42.7	6.4 (0.25)
1 1/2	48.8	6.4 (0.25)
2	61.2	7.9 (0.31)

GENERAL NOTE: See paras. 6.12.3, 6.12.5, and 6.12.6.

Figure 13 Bosses for Connections (20)

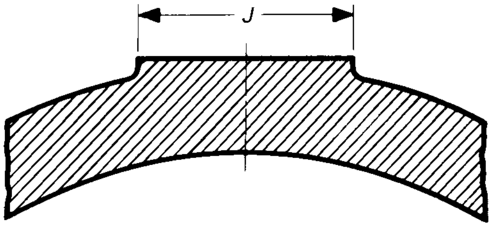

Connection Size, NPS	Minimum Boss Diameter, *J*, mm (in.)
3/8	31.8 (1.25)
1/2	38.1 (1.50)
3/4	44.4 (1.75)
1	53.8 (2.12)
1 1/4	63.5 (2.50)
1 1/2	69.8 (2.75)
2	85.9 (3.38)

GENERAL NOTE: See para. 6.12.5.

Figure 14 Butt Welding for Connections

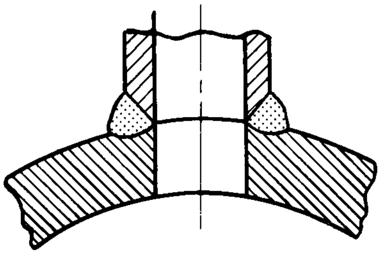

GENERAL NOTE: See paras. 6.12.4 and 6.12.5.

Figure 15 Method of Designating Location of Auxiliary Connections When Specified (Flanged Fittings)

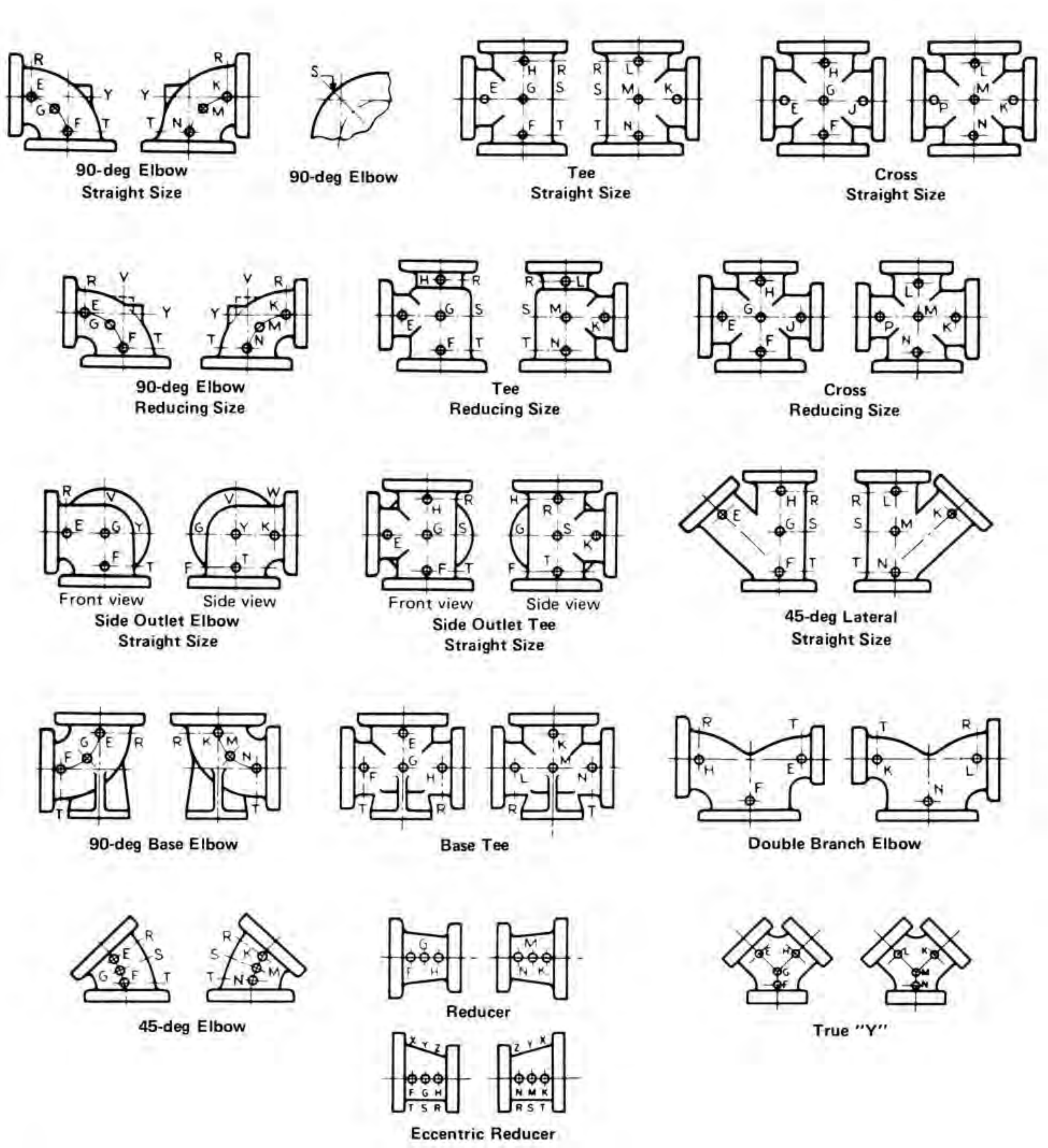

GENERAL NOTE: The above sketches show views of the same fitting and represent fittings with symmetrical shapes, with the exception of the side outlet elbow and side outlet tee (straight sizes). Sketches are illustrative only and do not imply required design (see para. 6.12).

(20) **Table 2-1.1 Pressure–Temperature Ratings for Group 1.1 Materials**

Nominal Designation	Forgings	Castings	Plates
C–Si	A105 (1)	A216 Gr. WCB (1)	A515 Gr. 70 (1)
C–Mn–Si	A350 Gr. LF2 (1)	...	A516 Gr. 70 (1), (2)
C–Mn–Si	...	...	A537 Cl. 1 (3)
C–Mn–Si–V	A350 Gr. LF6 Cl. 1 (4)	...	...
3½Ni	A350 Gr. LF3 (5)	...	...

	Working Pressures by Classes, bar						
	Class						
Temp., °C	150	300	400	600	900	1500	2500
−29 to 38	19.6	51.1	68.1	102.1	153.2	255.3	425.5
50	19.2	50.1	66.8	100.2	150.4	250.6	417.7
100	17.7	46.6	62.1	93.2	139.8	233.0	388.3
150	15.8	45.1	60.1	90.2	135.2	225.4	375.6
200	13.8	43.8	58.4	87.6	131.4	219.0	365.0
250	12.1	41.9	55.9	83.9	125.8	209.7	349.5
300	10.2	39.8	53.1	79.6	119.5	199.1	331.8
325	9.3	38.7	51.6	77.4	116.1	193.6	322.6
350	8.4	37.6	50.1	75.1	112.7	187.8	313.0
375	7.4	36.4	48.5	72.7	109.1	181.8	303.1
400	6.5	34.7	46.3	69.4	104.2	173.6	289.3
425	5.5	28.8	38.4	57.5	86.3	143.8	239.7
450	4.6	23.0	30.7	46.0	69.0	115.0	191.7
475	3.7	17.4	23.2	34.9	52.3	87.2	145.3
500	2.8	11.8	15.7	23.5	35.3	58.8	97.9
538	1.4	5.9	7.9	11.8	17.7	29.5	49.2

NOTES:
(1) Prolonged use above 425°C is permissible but not recommended. Prolonged exposure above 425°C may cause the carbide phase of steel to convert to graphite.
(2) Not to be used over 455°C.
(3) Not to be used over 370°C.
(4) Not to be used over 260°C.
(5) Not to be used over 345°C.

Table 2-1.1C Pressure–Temperature Ratings for Group 1.1 Materials

Nominal Designation	Forgings	Castings	Plates
C–Si	A105 (1)	A216 Gr. WCB (1)	A515 Gr. 70 (1)
C–Mn–Si	A350 Gr. LF2 (1)	...	A516 Gr. 70 (1), (2)
C–Mn–Si	...	...	A537 Cl. 1 (3)
C–Mn–Si–V	A350 Gr. LF6 Cl. 1 (4)	...	...
$3\frac{1}{2}$Ni	A350 Gr. LF3 (5)	...	...

	Working Pressures by Classes, psig						
	Class						
Temp., °F	150	300	400	600	900	1500	2500
−20 to 100	285	740	985	1,480	2,220	3,705	6,170
200	260	680	905	1,360	2,035	3,395	5,655
300	230	655	870	1,310	1,965	3,270	5,450
400	200	635	845	1,265	1,900	3,170	5,280
500	170	605	805	1,205	1,810	3,015	5,025
600	140	570	755	1,135	1,705	2,840	4,730
650	125	550	730	1,100	1,650	2,745	4,575
700	110	530	710	1,060	1,590	2,655	4,425
750	95	505	675	1,015	1,520	2,535	4,230
800	80	410	550	825	1,235	2,055	3,430
850	65	320	425	640	955	1,595	2,655
900	50	230	305	460	690	1,150	1,915
950	35	135	185	275	410	685	1,145
1,000	20	85	115	170	255	430	715

NOTES:
(1) Prolonged use above 800°F is permissible but not recommended. Prolonged exposure above 800°F may cause the carbide phase of steel to convert to graphite.
(2) Not to be used over 850°F.
(3) Not to be used over 700°F.
(4) Not to be used over 500°F.
(5) Not to be used over 650°F.

Table 2-1.2 Pressure–Temperature Ratings for Group 1.2 Materials

Nominal Designation	Forgings	Castings	Plates
C–Mn–Si	…	A216 Gr. WCC (1)	…
C–Mn–Si	…	A352 Gr. LCC (2)	…
C–Mn–Si–V	A350 Gr. LF6 Cl.2 (3)	…	…
2½Ni	…	A352 Gr. LC2	A203 Gr. B (1)
3½Ni	…	A352 Gr. LC3 (2)	A203 Gr. E (1)

	Working Pressures by Classes, bar						
	Class						
Temp., °C	150	300	400	600	900	1500	2500
−29 to 38	19.8	51.7	68.9	103.4	155.1	258.6	430.9
50	19.5	51.7	68.9	103.4	155.1	258.6	430.9
100	17.7	51.5	68.7	103.0	154.6	257.6	429.4
150	15.8	50.2	66.8	100.3	150.5	250.8	418.1
200	13.8	48.6	64.8	97.2	145.8	243.2	405.4
250	12.1	46.3	61.7	92.7	139.0	231.8	386.2
300	10.2	42.9	57.0	85.7	128.6	214.4	357.1
325	9.3	41.4	55.0	82.6	124.0	206.6	344.3
350	8.4	40.0	53.4	80.0	120.1	200.1	333.5
375	7.4	37.8	50.4	75.7	113.5	189.2	315.3
400	6.5	34.7	46.3	69.4	104.2	173.6	289.3
425	5.5	28.8	38.4	57.5	86.3	143.8	239.7
450	4.6	23.0	30.7	46.0	69.0	115.0	191.7
475	3.7	17.1	22.8	34.2	51.3	85.4	142.4
500	2.8	11.6	15.4	23.2	34.7	57.9	96.5
538	1.4	5.9	7.9	11.8	17.7	29.5	49.2

NOTES:
(1) Prolonged use above 425°C is permissible but not recommended. Prolonged exposure above 425°C may cause the carbide phase of steel to convert to graphite.
(2) Not to be used over 340°C.
(3) Not to be used over 260°C.

Table 2-1.2C Pressure–Temperature Ratings for Group 1.2 Materials

Nominal Designation	Forgings	Castings	Plates
C–Mn–Si	...	A216 Gr. WCC (1)	...
C–Mn–Si	...	A352 Gr. LCC (2)	...
C–Mn–Si–V	A350 Gr. LF6 Cl. 2 (3)	...	...
$2\frac{1}{2}$Ni	...	A352 Gr. LC2	A203 Gr. B (1)
$3\frac{1}{2}$Ni	...	A352 Gr. LC3 (2)	A203 Gr. E (1)

	Working Pressures by Classes, psig						
	Class						
Temp., °F	**150**	**300**	**400**	**600**	**900**	**1500**	**2500**
−20 to 100	290	750	1,000	1,500	2,250	3,750	6,250
200	260	750	1,000	1,500	2,250	3,750	6,250
300	230	730	970	1,455	2,185	3,640	6,070
400	200	705	940	1,405	2,110	3,520	5,865
500	170	665	885	1,330	1,995	3,325	5,540
600	140	605	805	1,210	1,815	3,025	5,040
650	125	590	785	1,175	1,765	2,940	4,905
700	110	555	740	1,110	1,665	2,775	4,630
750	95	505	675	1,015	1,520	2,535	4,230
800	80	410	550	825	1,235	2,055	3,430
850	65	320	425	640	955	1,595	2,655
900	50	225	295	445	670	1,115	1,855
950	35	135	185	275	410	685	1,145
1,000	20	85	115	170	255	430	715

NOTES:
(1) Prolonged use above 800°F is permissible but not recommended. Prolonged exposure above 800°F may cause the carbide phase of steel to convert to graphite.
(2) Not to be used over 650°F
(3) Not to be used over 500°F.

Table 2-1.3 Pressure–Temperature Ratings for Group 1.3 Materials

Nominal Designation	Forgings	Castings	Plates
C–Si	...	A352 LCB (1)	A515 Gr. 65 (2)
C–Mn–Si	...	...	A516 Gr. 65 (2), (3)
2½Ni	...	...	A203 Gr. A (2)
3½Ni	...	...	A203 Gr. D (2)
C–½Mo	...	A217 Gr. WC1 (4)–(6)	...
C–½Mo	...	A352 Gr. LC1 (1)	...

	Working Pressures by Classes, bar						
	Class						
Temp., °C	150	300	400	600	900	1500	2500
−29 to 38	18.4	48.0	64.0	96.0	144.1	240.1	400.1
50	18.2	47.5	63.3	94.9	142.4	237.3	395.6
100	17.4	45.3	60.5	90.7	136.0	226.7	377.8
150	15.8	43.9	58.6	87.9	131.8	219.7	366.1
200	13.8	42.5	56.7	85.1	127.6	212.7	354.4
250	12.1	40.8	54.4	81.6	122.3	203.9	339.8
300	10.2	38.7	51.6	77.4	116.1	193.4	322.4
325	9.3	37.6	50.1	75.2	112.7	187.9	313.1
350	8.4	36.4	48.5	72.8	109.2	182.0	303.3
375	7.4	35.0	46.6	69.9	104.9	174.9	291.4
400	6.5	32.6	43.5	65.2	97.9	163.1	271.9
425	5.5	27.3	36.4	54.6	81.9	136.5	227.5
450	4.6	21.6	28.8	43.2	64.8	107.9	179.9
475	3.7	15.7	20.9	31.3	47.0	78.3	130.6
500	2.8	11.1	14.8	22.1	33.2	55.4	92.3
538	1.4	5.9	7.9	11.8	17.7	29.5	49.2

NOTES:
(1) Not to be used over 340°C.
(2) Prolonged use above 425°C is permissible but not recommended. Prolonged exposure above 425°C may cause the carbide phase of steel to convert to graphite.
(3) Not to be used over 455°C.
(4) Prolonged use above 465°C is permissible but not recommended. Prolonged exposure above 465°C may cause the carbide phase of steel to convert to graphite.
(5) Use normalized and tempered material only.
(6) The deliberate addition of any element not listed in ASTM A217, Table 1 is prohibited, except that calcium (Ca) and manganese (Mn) may be added for deoxidation.

Table 2-1.3C Pressure–Temperature Ratings for Group 1.3 Materials

Nominal Designation	Forgings	Castings	Plates
C–Si	...	A352 Gr. LCB (1)	A515 Gr. 65 (2)
C–Mn–Si	...	...	A516 Gr. 65 (2), (3)
2½Ni	...	...	A203 Gr. A (2)
3½Ni	...	...	A203 Gr. D (2)
C–½Mo	...	A217 Gr. WC1 (4)–(6)	...
C–½Mo	...	A352 Gr. LC1 (1)	...

	Working Pressures by Classes, psig						
	Class						
Temp., °F	150	300	400	600	900	1500	2500
−20 to 100	265	695	930	1,395	2,090	3,480	5,805
200	255	660	880	1,320	1,980	3,300	5,505
300	230	640	850	1,275	1,915	3,190	5,315
400	200	615	820	1,230	1,845	3,075	5,125
500	170	585	780	1,175	1,760	2,930	4,885
600	140	550	735	1,105	1,655	2,755	4,595
650	125	535	710	1,065	1,600	2,665	4,440
700	110	510	685	1,025	1,535	2,560	4,270
750	95	475	635	955	1,430	2,385	3,970
800	80	390	520	780	1,175	1,955	3,255
850	65	300	400	595	895	1,490	2,485
900	50	200	270	405	605	1,010	1,685
950	35	135	185	275	410	685	1,145
1,000	20	85	115	170	255	430	715

NOTES:
(1) Not to be used over 650°F.
(2) Prolonged use above 800°F is permissible but not recommended. Prolonged exposure above 800°F may cause the carbide phase of steel to convert to graphite.
(3) Not to be used over 850°F
(4) Prolonged use above 875°F is permissible but not recommended. Prolonged exposure above 875°F may cause the carbide phase of steel to convert to graphite.
(5) Use normalized and tempered material only.
(6) The deliberate addition of any element not listed in ASTM A217, Table 1 is prohibited, except that calcium (Ca) and manganese (Mn) may be added for deoxidation.

Table 2-1.4 Pressure–Temperature Ratings for Group 1.4 Materials

Nominal Designation	Forgings	Castings	Plates
C–Si	...	...	A515 Gr. 60 (1)
C–Mn–Si	A350 Gr. LF1, Cl. 1 (1)	...	A516 Gr. 60 (1), (2)

	Working Pressures by Classes, bar						
	Class						
Temp., °C	150	300	400	600	900	1500	2500
−29 to 38	16.3	42.6	56.7	85.1	127.7	212.8	354.6
50	16.0	41.8	55.7	83.5	125.3	208.9	348.1
100	14.9	38.8	51.8	77.7	116.5	194.2	323.6
150	14.4	37.6	50.1	75.1	112.7	187.8	313.0
200	13.8	36.4	48.5	72.8	109.2	182.1	303.4
250	12.1	34.9	46.6	69.8	104.7	174.6	291.0
300	10.2	33.2	44.2	66.4	99.5	165.9	276.5
325	9.3	32.2	43.0	64.5	96.7	161.2	268.6
350	8.4	31.2	41.7	62.5	93.7	156.2	260.4
375	7.4	30.4	40.5	60.7	91.1	151.8	253.0
400	6.5	29.3	39.1	58.7	88.0	146.7	244.5
425	5.5	25.8	34.4	51.5	77.3	128.8	214.7
450	4.6	21.4	28.5	42.7	64.1	106.8	178.0
475	3.7	14.1	18.8	28.2	42.3	70.5	117.4
500	2.8	10.3	13.7	20.6	30.9	51.5	85.9
538	1.4	5.9	7.9	11.8	17.7	29.5	49.2

NOTES:
(1) Prolonged use above 425°C is permissible but not recommended. Prolonged exposure above 425°C may cause the carbide phase of steel to convert to graphite.
(2) Not to be used over 455°C.

Table 2-1.4C Pressure–Temperature Ratings for Group 1.4 Materials

Nominal Designation	Forgings	Castings	Plates
C–Si	…	…	A515 Gr. 60 (1)
C–Mn–Si	A350 Gr. LF1 Cl. 1 (1)	…	A516 Gr. 60 (1), (2)

	Working Pressures by Classes, psig						
	Class						
Temp., °F	150	300	400	600	900	1500	2500
−20 to 100	235	615	825	1,235	1,850	3,085	5,145
200	215	565	755	1,130	1,695	2,830	4,715
300	210	545	725	1,090	1,635	2,725	4,545
400	200	525	700	1,055	1,580	2,635	4,390
500	170	500	670	1,005	1,505	2,510	4,185
600	140	475	630	945	1,420	2,365	3,945
650	125	455	610	915	1,370	2,285	3,805
700	110	440	590	885	1,325	2,210	3,685
750	95	430	570	855	1,285	2,140	3,565
800	80	370	495	740	1,110	1,850	3,085
850	65	300	400	595	895	1,490	2,485
900	50	170	230	345	515	855	1,430
950	35	135	185	275	410	685	1,145
1,000	20	85	115	170	255	430	715

NOTES:
(1) Prolonged use above 800°F is permissible but not recommended. Prolonged exposure above 800°F may cause the carbide phase of steel to convert to graphite.
(2) Not to be used over 850°F.

Table 2-1.5 Pressure–Temperature Ratings for Group 1.5 Materials

Nominal Designation	Forgings	Castings	Plates
C–½Mo	A182 Gr. F1 (1)	...	A204 Gr. A (1)
C–½Mo	...	...	A204 Gr. B (1)

	Working Pressures by Classes, bar						
	Class						
Temp., °C	150	300	400	600	900	1500	2500
−29 to 38	18.4	48.0	64.0	96.0	144.1	240.1	400.1
50	18.4	48.0	64.0	96.0	144.1	240.1	400.1
100	17.7	47.9	63.9	95.9	143.8	239.7	399.5
150	15.8	47.3	63.1	94.7	142.0	236.7	394.5
200	13.8	45.8	61.1	91.6	137.4	229.0	381.7
250	12.1	44.5	59.3	89.0	133.5	222.5	370.9
300	10.2	42.9	57.0	85.7	128.6	214.4	357.1
325	9.3	41.4	55.0	82.6	124.0	206.6	344.3
350	8.4	40.3	53.6	80.4	120.7	201.1	335.3
375	7.4	38.9	51.6	77.6	116.5	194.1	323.2
400	6.5	36.5	48.9	73.3	109.8	183.1	304.9
425	5.5	35.2	46.5	70.0	105.1	175.1	291.6
450	4.6	33.7	45.1	67.7	101.4	169.0	281.8
475	3.7	31.7	42.3	63.4	95.1	158.2	263.9
500	2.8	24.1	32.1	48.1	72.2	120.3	200.5
538	1.4	11.3	15.1	22.7	34.0	56.7	94.6

NOTE: (1) Upon prolonged exposure to temperatures above 465°C, the carbide phase of carbon-molybdenum steel may be converted to graphite. Permissible but not recommended for prolonged use above 465°C.

Table 2-1.5C Pressure–Temperature Ratings for Group 1.5 Materials

Nominal Designation	Forgings	Castings	Plates
C–½Mo	A182 Gr. F1 (1)	...	A204 Gr. A (1)
C–½Mo	...	...	A204 Gr. B (1)

	Working Pressures by Classes, psig						
	Class						
Temp., °F	150	300	400	600	900	1500	2500
−20 to 100	265	695	930	1,395	2,090	3,480	5,805
200	260	695	930	1,395	2,090	3,480	5,805
300	230	685	915	1,375	2,060	3,435	5,725
400	200	660	885	1,325	1,985	3,310	5,520
500	170	640	855	1,285	1,925	3,210	5,350
600	140	605	805	1,210	1,815	3,025	5,040
650	125	590	785	1,175	1,765	2,940	4,905
700	110	570	755	1,135	1,705	2,840	4,730
750	95	530	710	1,065	1,595	2,660	4,430
800	80	510	675	1,015	1,525	2,540	4,230
850	65	485	650	975	1,460	2,435	4,060
900	50	450	600	900	1,350	2,245	3,745
950	35	280	375	560	845	1,405	2,345
1,000	20	165	220	330	495	825	1,370

NOTE: (1) Upon prolonged exposure to temperatures above 875°C, the carbide phase of carbon-molybdenum steel may be converted to graphite. Permissible but not recommended for prolonged use above 875°C.

Table 2-1.7 Pressure–Temperature Ratings for Group 1.7 Materials

Nominal Designation	Forgings	Castings	Plates
½Cr–½Mo	A182 Gr. F2 (1)	...	...
Ni–½Cr–½Mo	...	A217 Gr. WC4 (1)–(3)	...
¾Ni–¾Cr–1Mo	...	A217 Gr. WC5 (2), (3)	...

	Working Pressures by Classes, bar						
	Class						
Temp., °C	150	300	400	600	900	1500	2500
−29 to 38	19.8	51.7	68.9	103.4	155.1	258.6	430.9
50	19.5	51.7	68.9	103.4	155.1	258.6	430.9
100	17.7	51.5	68.7	103.0	154.6	257.6	429.4
150	15.8	50.3	66.8	100.3	150.6	250.8	418.2
200	13.8	48.6	64.8	97.2	145.8	243.4	405.4
250	12.1	46.3	61.7	92.7	139.0	231.8	386.2
300	10.2	42.9	57.0	85.7	128.6	214.4	357.1
325	9.3	41.4	55.0	82.6	124.0	206.6	344.3
350	8.4	40.3	53.6	80.4	120.7	201.1	335.3
375	7.4	38.9	51.6	77.6	116.5	194.1	323.2
400	6.5	36.5	48.9	73.3	109.8	183.1	304.9
425	5.5	35.2	46.5	70.0	105.1	175.1	291.6
450	4.6	33.7	45.1	67.7	101.4	169.0	281.8
475	3.7	31.7	42.3	63.4	95.1	158.2	263.9
500	2.8	26.7	35.6	53.4	80.1	133.4	222.4
538	1.4	13.9	18.6	27.9	41.8	69.7	116.2
550	...	12.6	16.8	25.2	37.8	63.0	105.0
575	...	7.2	9.6	14.4	21.5	35.9	59.8

NOTES:
(1) Not to be used over 538°C.
(2) Use normalized and tempered material only.
(3) The deliberate addition of any element not listed in ASTM A217, Table 1 is prohibited, except that calcium (Ca) and manganese (Mn) may be added for deoxidation.

Table 2-1.7C Pressure–Temperature Ratings for Group 1.7 Materials

Nominal Designation	Forgings	Castings	Plates
1/2Cr–1/2Mo	A182 Gr. F2 (1)	…	…
Ni–1/2Cr–1/2Mo	…	A217 Gr. WC4 (1)-(3)	…
3/4Ni–3/4Cr–1Mo	…	A217 Gr. WC5 (2), (3)	…

	Working Pressures by Classes, psig						
	Class						
Temp., °F	150	300	400	600	900	1500	2500
−20 to 100	290	750	1,000	1,500	2,250	3,750	6,250
200	260	750	1,000	1,500	2,250	3,750	6,250
300	230	730	970	1,455	2,185	3,640	6,070
400	200	705	940	1,410	2,115	3,530	5,880
500	170	665	885	1,330	1,995	3,325	5,540
600	140	605	805	1,210	1,815	3,025	5,040
650	125	590	785	1,175	1,765	2,940	4,905
700	110	570	755	1,135	1,705	2,840	4,730
750	95	530	710	1,065	1,595	2,660	4,430
800	80	510	675	1,015	1,525	2,540	4,230
850	65	485	650	975	1,460	2,435	4,060
900	50	450	600	900	1,350	2,245	3,745
950	35	315	420	630	945	1,575	2,630
1,000	20	200	270	405	605	1,010	1,685
1,050	…	160	210	315	475	790	1,315

NOTES:
(1) Not to be used over 1,000°F.
(2) Use normalized and tempered material only.
(3) The deliberate addition of any element not listed in ASTM A217, Table 1 is prohibited, except that calcium (Ca) and manganese (Mn) may be added for deoxidation.

Table 2-1.9 Pressure–Temperature Ratings for Group 1.9 Materials

Nominal Designation	Forgings	Castings	Plates
1¼Cr–½Mo	…	A217 Gr. WC6 (1)–(3)	…
1¼Cr–½Mo–Si	A182 Gr. F11 Cl. 2 (1), (4)	…	A387 Gr. 11 Cl. 2 (4)

Temp., °C	Working Pressures by Classes, bar						
	Class						
	150	300	400	600	900	1500	2500
−29 to 38	19.8	51.7	68.9	103.4	155.1	258.6	430.9
50	19.5	51.7	68.9	103.4	155.1	258.6	430.9
100	17.7	51.5	68.6	103.0	154.4	257.4	429.0
150	15.8	49.7	66.3	99.5	149.2	248.7	414.5
200	13.8	48.0	63.9	95.9	143.9	239.8	399.6
250	12.1	46.3	61.7	92.7	139.0	231.8	386.2
300	10.2	42.9	57.0	85.7	128.6	214.4	357.1
325	9.3	41.4	55.0	82.6	124.0	206.6	344.3
350	8.4	40.3	53.6	80.4	120.7	201.1	335.3
375	7.4	38.9	51.6	77.6	116.5	194.1	323.2
400	6.5	36.5	48.9	73.3	109.8	183.1	304.9
425	5.5	35.2	46.5	70.0	105.1	175.1	291.6
450	4.6	33.7	45.1	67.7	101.4	169.0	281.8
475	3.7	31.7	42.3	63.4	95.1	158.2	263.9
500	2.8	25.7	34.3	51.5	77.2	128.6	214.4
538	1.4	14.9	19.9	29.8	44.7	74.5	124.1
550	…	12.7	16.9	25.4	38.1	63.5	105.9
575	…	8.8	11.7	17.6	26.4	44.0	73.4
600	…	6.1	8.1	12.2	18.3	30.5	50.9
625	…	4.3	5.7	8.5	12.8	21.3	35.5
650	…	2.8	3.8	5.7	8.5	14.2	23.6

NOTES:
(1) Use normalized and tempered material only.
(2) Not to be used over 590°C.
(3) The deliberate addition of any element not listed in ASTM A217, Table 1 is prohibited, except that calcium (Ca) and manganese (Mn) may be added for deoxidation.
(4) Prolonged use above 590°C is permissible but not recommended.

Table 2-1.9C Pressure–Temperature Ratings for Group 1.9 Materials

Nominal Designation	Forgings	Castings	Plates
1¼Cr–½Mo	...	A217 Gr. WC6 (1)-(3)	...
1¼Cr–½Mo-Si	A182 Gr. F11 Cl. 2 (1), (4)	...	A387 Gr. 11 Cl. 2 (4)

	Working Pressures by Classes, psig						
	Class						
Temp., °F	150	300	400	600	900	1500	2500
−20 to 100	290	750	1,000	1,500	2,250	3,750	6,250
200	260	750	1,000	1,500	2,250	3,750	6,250
300	230	720	965	1,445	2,165	3,610	6,015
400	200	695	925	1,385	2,080	3,465	5,775
500	170	665	885	1,330	1,995	3,325	5,540
600	140	605	805	1,210	1,815	3,025	5,040
650	125	590	785	1,175	1,765	2,940	4,905
700	110	570	755	1,135	1,705	2,840	4,730
750	95	530	710	1,065	1,595	2,660	4,430
800	80	510	675	1,015	1,525	2,540	4,230
850	65	485	650	975	1,460	2,435	4,060
900	50	450	600	900	1,350	2,245	3,745
950	35	320	425	640	955	1,595	2,655
1,000	20	215	290	430	650	1,080	1,800
1,050	...	145	190	290	430	720	1,200
1,100	...	95	130	190	290	480	800
1,150	...	65	85	130	195	325	545
1,200	...	40	55	80	125	205	345

NOTES:
(1) Use normalized and tempered material only.
(2) Not to be used over 1,100°F.
(3) The deliberate addition of any element not listed in ASTM A217, Table 1 is prohibited, except that calcium (Ca) and manganese (Mn) may be added for deoxidation.
(4) Prolonged use above 1,100°F is permissible but not recommended.

Table 2-1.10 Pressure–Temperature Ratings for Group 1.10 Materials

Nominal Designation	Forgings	Castings	Plates
$2\frac{1}{4}$Cr–1Mo	A182 Gr. F22 Cl. 3 (1)	A217 Gr. WC9 (2)–(4)	A387 Gr. 22 Cl. 2 (1)

	Working Pressures by Classes, bar						
	Class						
Temp., °C	150	300	400	600	900	1500	2500
−29 to 38	19.8	51.7	68.9	103.4	155.1	258.6	430.9
50	19.5	51.7	68.9	103.4	155.1	258.6	430.9
100	17.7	51.5	68.7	103.0	154.6	257.6	429.4
150	15.8	50.3	66.8	100.3	150.6	250.8	418.2
200	13.8	48.6	64.8	97.2	145.8	243.4	405.4
250	12.1	46.3	61.7	92.7	139.0	231.8	386.2
300	10.2	42.9	57.0	85.7	128.6	214.4	357.1
325	9.3	41.4	55.0	82.6	124.0	206.6	344.3
350	8.4	40.3	53.6	80.4	120.7	201.1	335.3
375	7.4	38.9	51.6	77.6	116.5	194.1	323.2
400	6.5	36.5	48.9	73.3	109.8	183.1	304.9
425	5.5	35.2	46.5	70.0	105.1	175.1	291.6
450	4.6	33.7	45.1	67.7	101.4	169.0	281.8
475	3.7	31.7	42.3	63.4	95.1	158.2	263.9
500	2.8	28.2	37.6	56.5	84.7	140.9	235.0
538	1.4	18.4	24.6	36.9	55.3	92.2	153.7
550	...	15.6	20.8	31.3	46.9	78.2	130.3
575	...	10.5	14.0	21.1	31.6	52.6	87.7
600	...	6.9	9.2	13.8	20.7	34.4	57.4
625	...	4.5	6.0	8.9	13.4	22.3	37.2
650	...	2.8	3.8	5.7	8.5	14.2	23.6

NOTES:

(1) Prolonged use above 590°C is permissible but not recommended.

(2) Use normalized and tempered material only.

(3) Not to be used over 590°C.

(4) The deliberate addition of any element not listed in ASTM A217, Table 1 is prohibited, except that calcium (Ca) and manganese (Mn) may be added for deoxidation.

Table 2-1.10C Pressure–Temperature Ratings for Group 1.10 Materials

Nominal Designation	Forgings	Castings	Plates
2¼Cr–1Mo	A182 Gr. F22 Cl. 3 (1)	A217 Gr. WC9 (2)–(4)	A387 Gr. 22 Cl. 2 (1)

	Working Pressures by Classes, psig						
	Class						
Temp., °F	**150**	**300**	**400**	**600**	**900**	**1500**	**2500**
−20 to 100	290	750	1,000	1,500	2,250	3,750	6,250
200	260	750	1,000	1,500	2,250	3,750	6,250
300	230	730	970	1,455	2,185	3,640	6,070
400	200	705	940	1,410	2,115	3,530	5,880
500	170	665	885	1,330	1,995	3,325	5,540
600	140	605	805	1,210	1,815	3,025	5,040
650	125	590	785	1,175	1,765	2,940	4,905
700	110	570	755	1,135	1,705	2,840	4,730
750	95	530	710	1,065	1,595	2,660	4,430
800	80	510	675	1,015	1,525	2,540	4,230
850	65	485	650	975	1,460	2,435	4,060
900	50	450	600	900	1,350	2,245	3,745
950	35	385	515	775	1,160	1,930	3,220
1,000	20	265	355	535	800	1,335	2,230
1,050	...	175	235	350	525	875	1,455
1,100	...	110	145	220	330	550	915
1,150	...	70	90	135	205	345	570
1,200	...	40	55	80	125	205	345

NOTES:
(1) Prolonged use above 1,100°F is permissible but not recommended.
(2) Use normalized and tempered material only.
(3) Not to be used over 1,100°F.
(4) The deliberate addition of any element not listed in ASTM A217, Table 1 is prohibited, except that calcium (Ca) and manganese (Mn) may be added for deoxidation.

Table 2-1.11 Pressure–Temperature Ratings for Group 1.11 Materials

Nominal Designation	Forgings	Castings	Plates
C–½Mo	...	...	A204 Gr. C (1)

	Working Pressures by Classes, bar						
	Class						
Temp., °C	150	300	400	600	900	1500	2500
−29 to 38	20.0	51.7	68.9	103.4	155.1	258.6	430.9
50	19.5	51.7	68.9	103.4	155.1	258.6	430.9
100	17.7	51.5	68.7	103.0	154.6	257.6	429.4
150	15.8	50.3	66.8	100.3	150.6	250.8	418.2
200	13.8	48.6	64.8	97.2	145.8	243.4	405.4
250	12.1	46.3	61.7	92.7	139.0	231.8	386.2
300	10.2	42.9	57.0	85.7	128.6	214.4	357.1
325	9.3	41.4	55.0	82.6	124.0	206.6	344.3
350	8.4	40.3	53.6	80.4	120.7	201.1	335.3
375	7.4	38.9	51.6	77.6	116.5	194.1	323.2
400	6.5	36.5	48.9	73.3	109.8	183.1	304.9
425	5.5	35.2	46.5	70.0	105.1	175.1	291.6
450	4.6	33.7	45.1	67.7	101.4	169.0	281.8
475	3.7	31.7	42.3	63.4	95.1	158.2	263.9
500	2.8	23.6	31.4	47.1	70.7	117.8	196.3
538	1.4	11.3	15.3	22.7	34.4	56.7	94.6
550	...	11.3	15.3	22.7	34.4	56.7	94.6
575	...	10.1	13.6	20.1	30.2	50.3	83.8
600	...	7.1	9.5	14.2	21.3	35.6	59.3
625	...	5.3	7.1	10.6	15.9	26.5	44.2
650	...	3.1	4.1	6.1	9.2	15.4	25.6

NOTE: (1) Upon prolonged exposure to temperatures above 465°C, the carbide phase of carbon-molybdenum steel may be converted to graphite. Permissible but not recommended for prolonged use above 465°C.

Table 2-1.11C Pressure–Temperature Ratings for Group 1.11 Materials

Nominal Designation	Forgings	Castings	Plates
C–½Mo	...	...	A204 Gr. C (1)

	Working Pressures by Classes, psig						
	Class						
Temp., °F	150	300	400	600	900	1500	2500
−20 to 100	290	750	1,000	1,500	2,250	3,750	6,250
200	260	750	1,000	1,500	2,250	3,750	6,250
300	230	730	970	1,455	2,185	3,640	6,070
400	200	705	940	1,410	2,115	3,530	5,880
500	170	665	885	1,330	1,995	3,325	5,540
600	140	605	805	1,210	1,815	3,025	5,040
650	125	590	785	1,175	1,765	2,940	4,905
700	110	570	755	1,135	1,705	2,840	4,730
750	95	530	710	1,065	1,595	2,660	4,430
800	80	510	675	1,015	1,525	2,540	4,230
850	65	485	650	975	1,460	2,435	4,060
900	50	450	600	900	1,345	2,245	3,745
950	35	280	375	560	845	1,405	2,345
1,000	20	165	220	330	495	825	1,370
1,050	...	165	220	330	495	825	1,370
1,100	...	110	145	220	330	550	915
1,150	...	80	110	165	245	410	685
1,200	...	45	60	90	135	225	370

NOTE: (1) Upon prolonged exposure to temperatures above 875°F, the carbide phase of carbon-molybdenum steel may be converted to graphite. Permissible but not recommended for prolonged use above 875°F.

Table 2-1.13 Pressure–Temperature Ratings for Group 1.13 Materials

Nominal Designation	Forgings	Castings	Plates
5Cr–½Mo	A182 Gr. F5a	A217 Gr. C5 (1), (2)	...

	Working Pressures by Classes, bar						
	Class						
Temp., °C	150	300	400	600	900	1500	2500
−29 to 38	20.0	51.7	68.9	103.4	155.1	258.6	430.9
50	19.5	51.7	68.9	103.4	155.1	258.6	430.9
100	17.7	51.5	68.7	103.0	154.6	257.6	429.4
150	15.8	50.3	66.8	100.3	150.6	250.8	418.2
200	13.8	48.6	64.8	97.2	145.8	243.4	405.4
250	12.1	46.3	61.7	92.7	139.0	231.8	386.2
300	10.2	42.9	57.0	85.7	128.6	214.4	357.1
325	9.3	41.4	55.0	82.6	124.0	206.6	344.3
350	8.4	40.3	53.6	80.4	120.7	201.1	335.3
375	7.4	38.9	51.6	77.6	116.5	194.1	323.2
400	6.5	36.5	48.9	73.3	109.8	183.1	304.9
425	5.5	35.2	46.5	70.0	105.1	175.1	291.6
450	4.6	33.7	45.1	67.7	101.4	169.0	281.8
475	3.7	27.9	37.1	55.7	83.6	139.3	232.1
500	2.8	21.4	28.5	42.8	64.1	106.9	178.2
538	1.4	13.7	18.3	27.4	41.1	68.6	114.3
550	...	12.0	16.1	24.1	36.1	60.2	100.4
575	...	8.9	11.8	17.8	26.7	44.4	74.0
600	...	6.2	8.3	12.5	18.7	31.2	51.9
625	...	4.0	5.3	8.0	12.0	20.0	33.3
650	...	2.4	3.2	4.7	7.1	11.8	19.7

NOTES:
(1) Use normalized and tempered material only.
(2) The deliberate addition of any element not listed in ASTM A217, Table 1 is prohibited, except that calcium (Ca) and manganese (Mn) may be added for deoxidation.

Table 2-1.13C Pressure–Temperature Ratings for Group 1.13 Materials

Nominal Designation	Forgings	Castings	Plates
5Cr–½Mo	A182 Gr. F5a	A217 Gr. C5 (1), (2)	...

	Working Pressures by Classes, psig						
	Class						
Temp., °F	150	300	400	600	900	1500	2500
−20 to 100	290	750	1,000	1,500	2,250	3,750	6,250
200	260	750	1,000	1,500	2,250	3,750	6,250
300	230	730	970	1,455	2,185	3,640	6,070
400	200	705	940	1,410	2,115	3,530	5,880
500	170	665	885	1,330	1,995	3,325	5,540
600	140	605	805	1,210	1,815	3,025	5,040
650	125	590	785	1,175	1,765	2,940	4,905
700	110	570	755	1,135	1,705	2,840	4,730
750	95	530	710	1,065	1,595	2,660	4,430
800	80	510	675	1,015	1,525	2,540	4,230
850	65	485	650	975	1,460	2,435	4,060
900	50	375	500	745	1,120	1,870	3,115
950	35	275	365	550	825	1,370	2,285
1,000	20	200	265	400	595	995	1,655
1,050	...	145	190	290	430	720	1,200
1,100	...	100	135	200	300	495	830
1,150	...	60	80	125	185	310	515
1,200	...	35	45	70	105	170	285

NOTES:
(1) Use normalized and tempered material only.
(2) The deliberate addition of any element not listed in ASTM A217, Table 1 is prohibited, except that calcium (Ca) and manganese (Mn) may be added for deoxidation.

Table 2-1.14 Pressure–Temperature Ratings for Group 1.14 Materials

Nominal Designation	Forgings	Castings	Plates
9Cr–1Mo	A182 Gr. F9	A217 Gr. C12 (1), (2)	...

	Working Pressures by Classes, bar						
	Class						
Temp., °C	150	300	400	600	900	1500	2500
−29 to 38	20.0	51.7	68.9	103.4	155.1	258.6	430.9
50	19.5	51.7	68.9	103.4	155.1	258.6	430.9
100	17.7	51.5	68.7	103.0	154.6	257.6	429.4
150	15.8	50.3	66.8	100.3	150.6	250.8	418.2
200	13.8	48.6	64.8	97.2	145.8	243.4	405.4
250	12.1	46.3	61.7	92.7	139.0	231.8	386.2
300	10.2	42.9	57.0	85.7	128.6	214.4	357.1
325	9.3	41.4	55.0	82.6	124.0	206.6	344.3
350	8.4	40.3	53.6	80.4	120.7	201.1	335.3
375	7.4	38.9	51.6	77.6	116.5	194.1	323.2
400	6.5	36.5	48.9	73.3	109.8	183.1	304.9
425	5.5	35.2	46.5	70.0	105.1	175.1	291.6
450	4.6	33.7	45.1	67.7	101.4	169.0	281.8
475	3.7	31.7	42.3	63.4	95.1	158.2	263.9
500	2.8	28.2	37.6	56.5	84.7	140.9	235.0
538	1.4	17.5	23.3	35.0	52.5	87.5	145.8
550	...	15.0	20.0	30.0	45.0	75.0	125.0
575	...	10.5	13.9	20.9	31.4	52.3	87.1
600	...	7.2	9.6	14.4	21.5	35.9	59.8
625	...	5.0	6.6	9.9	14.9	24.8	41.4
650	...	3.5	4.7	7.1	10.6	17.7	29.5

NOTES:

(1) Use normalized and tempered material only.

(2) The deliberate addition of any element not listed in ASTM A217, Table 1 is prohibited, except that calcium (Ca) and manganese (Mn) may be added for deoxidation.

Table 2-1.14C Pressure–Temperature Ratings for Group 1.14 Materials

Nominal Designation	Forgings	Castings	Plates
9Cr–1Mo	A182 Gr. F9	A217 Gr. C12 (1), (2)	...

	Working Pressures by Classes, psig						
	Class						
Temp., °F	150	300	400	600	900	1500	2500
−20 to 100	290	750	1,000	1,500	2,250	3,750	6,250
200	260	750	1,000	1,500	2,250	3,750	6,250
300	230	730	970	1,455	2,185	3,640	6,070
400	200	705	940	1,410	2,115	3,530	5,880
500	170	665	885	1,330	1,995	3,325	5,540
600	140	605	805	1,210	1,815	3,025	5,040
650	125	590	785	1,175	1,765	2,940	4,905
700	110	570	755	1,135	1,705	2,840	4,730
750	95	530	710	1,065	1,595	2,660	4,430
800	80	510	675	1,015	1,525	2,540	4,230
850	65	485	650	975	1,460	2,435	4,060
900	50	450	600	900	1,350	2,245	3,745
950	35	375	505	755	1,130	1,885	3,145
1,000	20	255	340	505	760	1,270	2,115
1,050	...	170	230	345	515	855	1,430
1,100	...	115	150	225	340	565	945
1,150	...	75	100	150	225	375	630
1,200	...	50	70	105	155	255	430

NOTES:

(1) Use normalized and tempered material only.

(2) The deliberate addition of any element not listed in ASTM A217, Table 1 is prohibited, except that calcium (Ca) and manganese (Mn) may be added for deoxidation.

(20) **Table 2-1.15 Pressure–Temperature Ratings for Group 1.15 Materials**

Nominal Designation	Forgings	Castings	Plates
9Cr–1Mo–V	A182 Gr. F91 Type 1	A217 Gr. C12A (1)	A387 Gr. 91 Cl. 2

	Working Pressures by Classes, bar						
	Class						
Temp., °C	**150**	**300**	**400**	**600**	**900**	**1500**	**2500**
−29 to 38	20.0	51.7	68.9	103.4	155.1	258.6	430.9
50	19.5	51.7	68.9	103.4	155.1	258.6	430.9
100	17.7	51.5	68.7	103.0	154.6	257.6	429.4
150	15.8	50.3	66.8	100.3	150.6	250.8	418.2
200	13.8	48.6	64.8	97.2	145.8	243.4	405.4
250	12.1	46.3	61.7	92.7	139.0	231.8	386.2
300	10.2	42.9	57.0	85.7	128.6	214.4	357.1
325	9.3	41.4	55.0	82.6	124.0	206.6	344.3
350	8.4	40.3	53.6	80.4	120.7	201.1	335.3
375	7.4	38.9	51.6	77.6	116.5	194.1	323.2
400	6.5	36.5	48.9	73.3	109.8	183.1	304.9
425	5.5	35.2	46.5	70.0	105.1	175.1	291.6
450	4.6	33.7	45.1	67.7	101.4	169.0	281.8
475	3.7	31.7	42.3	63.4	95.1	158.2	263.9
500	2.8	28.2	37.6	56.5	84.7	140.9	235.0
538	1.4	25.2	33.4	50.0	75.2	125.5	208.9
550	...	25.0	33.3	49.8	74.8	124.9	208.0
575	...	24.0	31.9	47.9	71.8	119.7	199.5
600	...	18.6	24.8	37.2	55.9	93.1	155.1
625	...	12.6	16.8	25.2	37.9	63.1	105.1
650	...	8.2	11.0	16.5	24.7	41.1	68.6

NOTE: (1) The deliberate addition of any element not listed in ASTM A217, Table 1 is prohibited, except that calcium (Ca) and manganese (Mn) may be added for deoxidation.

Table 2-1.15C Pressure–Temperature Ratings for Group 1.15 Materials (20)

Nominal Designation	Forgings	Castings	Plates
9Cr–1Mo–V	A182 Gr. F91 Type 1	A217 Gr. C12A (1)	A387 Gr. 91 Cl. 2

	Working Pressures by Classes, psig						
	Class						
Temp., °F	150	300	400	600	900	1500	2500
−20 to 100	290	750	1,000	1,500	2,250	3,750	6,250
200	260	750	1,000	1,500	2,250	3,750	6,250
300	230	730	970	1,455	2,185	3,640	6,070
400	200	705	940	1,410	2,115	3,530	5,880
500	170	665	885	1,330	1,995	3,325	5,540
600	140	605	805	1,210	1,815	3,025	5,040
650	125	590	785	1,175	1,765	2,940	4,905
700	110	570	755	1,135	1,705	2,840	4,730
750	95	530	710	1,065	1,595	2,660	4,430
800	80	510	675	1,015	1,525	2,540	4,230
850	65	485	650	975	1,460	2,435	4,060
900	50	450	600	900	1,350	2,245	3,745
950	35	385	515	775	1,160	1,930	3,220
1,000	20	365	485	725	1,090	1,820	3,030
1,050	...	360	480	720	1,080	1,800	3,000
1,100	...	300	400	600	895	1,490	2,485
1,150	...	195	260	390	585	975	1,630
1,200	...	120	160	240	360	600	1,000

NOTE: (1) The deliberate addition of any element not listed in ASTM A217, Table 1 is prohibited, except that calcium (Ca) and manganese (Mn) may be added for deoxidation.

Table 2-1.17 Pressure–Temperature Ratings for Group 1.17 Materials

Nominal Designation	Forgings	Castings	Plates
1Cr–½Mo	A182 Gr. F12 Cl. 2 (1), (2)	…	…
5Cr–½Mo	A182 Gr. F5	…	…

	Working Pressures by Classes, bar						
	Class						
Temp., °C	150	300	400	600	900	1500	2500
−29 to 38	19.8	51.7	68.9	103.4	155.1	258.6	430.9
50	19.5	51.5	68.7	103.0	154.5	257.5	429.2
100	17.7	50.4	67.3	100.9	151.3	252.2	420.4
150	15.8	48.2	64.2	96.4	144.5	240.9	401.5
200	13.8	46.3	61.7	92.5	138.8	231.3	385.6
250	12.1	44.8	59.8	89.6	134.5	224.1	373.5
300	10.2	42.9	57.0	85.7	128.6	214.4	357.1
325	9.3	41.4	55.0	82.6	124.0	206.6	344.3
350	8.4	40.3	53.6	80.4	120.7	201.1	335.3
375	7.4	38.9	51.6	77.6	116.5	194.1	323.2
400	6.5	36.5	48.9	73.3	109.8	183.1	304.9
425	5.5	35.2	46.5	70.0	105.1	175.1	291.6
450	4.6	33.7	45.1	67.7	101.4	169.0	281.8
475	3.7	27.9	37.1	55.7	83.6	139.3	232.1
500	2.8	21.4	28.5	42.8	64.1	106.9	178.2
538	1.4	13.7	18.3	27.4	41.1	68.6	114.3
550	…	12.0	16.1	24.1	36.1	60.2	100.4
575	…	8.8	11.7	17.6	26.4	44.0	73.4
600	…	6.1	8.1	12.1	18.2	30.3	50.4
625	…	4.0	5.3	8.0	12.0	20.0	33.3
650	…	2.4	3.2	4.7	7.1	11.8	19.7

NOTES:
(1) Use normalized and tempered material only.
(2) Prolonged use above 590°C is permissible but not recommended.

Table 2-1.17C Pressure–Temperature Ratings for Group 1.17 Materials

Nominal Designation	Forgings	Castings	Plates
1Cr–½Mo	A182 Gr. F12 Cl. 2 (1), (2)	...	...
5Cr–½Mo	A182 Gr. F5	...	...

	Working Pressures by Classes, psig						
	Class						
Temp., °F	150	300	400	600	900	1500	2500
−20 to 100	290	750	1,000	1,500	2,250	3,750	6,250
200	260	735	980	1,470	2,210	3,680	6,135
300	230	700	935	1,400	2,100	3,495	5,830
400	200	670	890	1,335	2,005	3,345	5,570
500	170	645	860	1,290	1,940	3,230	5,385
600	140	605	805	1,210	1,815	3,025	5,040
650	125	590	785	1,175	1,765	2,940	4,905
700	110	570	755	1,135	1,705	2,840	4,730
750	95	530	710	1,065	1,595	2,660	4,430
800	80	510	675	1,015	1,525	2,540	4,230
850	65	485	650	975	1,460	2,435	4,060
900	50	375	500	745	1,120	1,870	3,115
950	35	275	365	550	825	1,370	2,285
1,000	20	200	265	400	595	995	1,655
1,050	...	145	190	290	430	720	1,200
1,100	...	95	130	190	290	480	800
1,150	...	60	80	125	185	310	515
1,200	...	35	45	70	105	170	285

NOTES:
(1) Use normalized and tempered material only.
(2) Prolonged use above 1,100°F is permissible but not recommended.

(20) **Table 2-1.18 Pressure–Temperature Ratings for Group 1.18 Materials**

Nominal Designation	Forgings	Castings	Plates
9Cr–2W–V	A 182 Gr. F92 (1)	...	...

	Working Pressures by Classes, bar						
	Class						
Temp., °C	150	300	400	600	900	1500	2500
−29 to 38	20.0	51.7	68.9	103.4	155.1	258.6	430.9
50	19.5	51.7	68.9	103.4	155.1	258.6	430.9
100	17.7	51.5	68.7	103.0	154.6	257.6	429.4
150	15.8	50.3	66.8	100.3	150.6	250.8	418.2
200	13.8	48.6	64.8	97.2	145.8	243.4	405.4
250	12.1	46.3	61.7	92.7	139.0	231.8	386.2
300	10.2	42.9	57.0	85.7	128.6	214.4	357.1
325	9.3	41.4	55.0	82.6	124.0	206.6	344.3
350	8.4	40.3	53.6	80.4	120.7	201.1	335.3
375	7.4	38.9	51.6	77.6	116.5	194.1	323.2
400	6.5	36.5	48.9	73.3	109.8	183.1	304.9
425	5.5	35.2	46.5	70.0	105.1	175.1	291.6
450	4.6	33.7	45.1	67.7	101.4	169.0	281.8
475	3.7	31.7	42.3	63.4	95.1	158.2	263.9
500	2.8	28.2	37.6	56.5	84.7	140.9	235.0
538	1.4	25.2	33.4	50.0	75.2	125.5	208.9
550	1.4	25.0	33.3	49.8	74.8	124.9	208.0
575	1.4	24.0	31.9	47.9	71.8	119.7	199.5
600	1.4	21.6	28.6	42.9	64.2	107.0	178.5
625	1.4	18.3	24.3	36.6	54.9	91.2	152.0
650	1.4	13.2	18.9	26.5	39.7	66.2	110.3

NOTE: (1) Applications above 620°C are limited to tubing with maximum outside diameter of 89 mm.

Table 2-1.18C Pressure–Temperature Ratings for Group 1.18 Materials

Nominal Designation	Forgings	Castings	Plates
9Cr–2W–V	A182 Gr. F92 (1)	...	...

	Working Pressures by Classes, psig						
	Class						
Temp., °F	150	300	400	600	900	1500	2500
−20 to 100	290	750	1,000	1,500	2,250	3,750	6,250
200	260	750	1,000	1,500	2,250	3,750	6,250
300	230	730	970	1,455	2,185	3,640	6,070
400	200	705	940	1,410	2,115	3,530	5,880
500	170	665	885	1,330	1,995	3,325	5,540
600	140	605	805	1,210	1,815	3,025	5,040
650	125	590	785	1,175	1,765	2,940	4,905
700	110	570	755	1,135	1,705	2,840	4,730
750	95	530	710	1,065	1,595	2,660	4,430
800	80	510	675	1,015	1,525	2,540	4,230
850	65	485	650	975	1,460	2,435	4,060
900	50	450	600	900	1,350	2,245	3,745
950	35	385	515	775	1,160	1,930	3,220
1,000	20	365	485	725	1,090	1,820	3,030
1,050	20	360	480	720	1,080	1,800	3,000
1,100	20	325	430	645	965	1,610	2,685
1,150	20	275	365	550	825	1,370	2,285
1,200	20	190	275	385	575	960	1,600

NOTE: (1) Application above 1,150°F is limited to tubing with maximum outside diameter of $3\frac{1}{2}$ in.

Table 2-2.1 Pressure–Temperature Ratings for Group 2.1 Materials

Nominal Designation	Forgings	Castings	Plates
18Cr–8Ni	A182 Gr. F304 (1)	A351 Gr. CF3 (2)	A240 Gr. 304 (1)
18Cr–8Ni	A182 Gr. F304H	A351 Gr. CF8 (1)	A240 Gr. 304H

	Working Pressures by Classes, bar						
	Class						
Temp., °C	150	300	400	600	900	1500	2500
−29 to 38	19.0	49.6	66.2	99.3	148.9	248.2	413.7
50	18.3	47.8	63.8	95.6	143.5	239.1	398.5
100	15.7	40.9	54.5	81.7	122.6	204.3	340.4
150	14.2	37.0	49.3	74.0	111.0	185.0	308.4
200	13.2	34.5	46.0	69.0	103.4	172.4	287.3
250	12.1	32.5	43.3	65.0	97.5	162.4	270.7
300	10.2	30.9	41.2	61.8	92.7	154.6	257.6
325	9.3	30.2	40.3	60.4	90.7	151.1	251.9
350	8.4	29.6	39.5	59.3	88.9	148.1	246.9
375	7.4	29.0	38.7	58.1	87.1	145.2	241.9
400	6.5	28.4	37.9	56.9	85.3	142.2	237.0
425	5.5	28.0	37.3	56.0	84.0	140.0	233.3
450	4.6	27.4	36.5	54.8	82.2	137.0	228.4
475	3.7	26.9	35.9	53.9	80.8	134.7	224.5
500	2.8	26.5	35.3	53.0	79.5	132.4	220.7
538	1.4	24.4	32.6	48.9	73.3	122.1	203.6
550	...	23.6	31.4	47.1	70.7	117.8	196.3
575	...	20.8	27.8	41.7	62.5	104.2	173.7
600	...	16.9	22.5	33.8	50.6	84.4	140.7
625	...	13.8	18.4	27.6	41.4	68.9	114.9
650	...	11.3	15.0	22.5	33.8	56.3	93.8
675	...	9.3	12.5	18.7	28.0	46.7	77.9
700	...	8.0	10.7	16.1	24.1	40.1	66.9
725	...	6.8	9.0	13.5	20.3	33.8	56.3
750	...	5.8	7.7	11.6	17.3	28.9	48.1
775	...	4.6	6.2	9.0	13.7	22.8	38.0
800	...	3.5	4.8	7.0	10.5	17.4	29.2
816	...	2.8	3.8	5.9	8.6	14.1	23.8

NOTES:
(1) At temperatures over 538°C, use only when the carbon content is 0.04% or higher.
(2) Not to be used over 425°C.

Table 2-2.1C Pressure–Temperature Ratings for Group 2.1 Materials

Nominal Designation	Forgings	Castings	Plates
18Cr–8Ni	A182 Gr. F304 (1)	A351 Gr. CF3 (2)	A240 Gr. 304 (1)
18Cr–8Ni	A182 Gr. F304H	A351 Gr. CF8 (1)	A240 Gr. 304H

	Working Pressures by Classes, psig						
	Class						
Temp., °F	150	300	400	600	900	1500	2500
−20 to 100	275	720	960	1,440	2,160	3,600	6,000
200	230	600	800	1,200	1,800	3,000	5,000
300	205	540	715	1,075	1,615	2,690	4,480
400	190	495	660	995	1,490	2,485	4,140
500	170	465	620	930	1,395	2,330	3,880
600	140	440	590	885	1,325	2,210	3,680
650	125	430	575	865	1,295	2,160	3,600
700	110	420	565	845	1,265	2,110	3,520
750	95	415	550	825	1,240	2,065	3,440
800	80	405	540	810	1,215	2,030	3,380
850	65	395	530	790	1,190	1,980	3,300
900	50	390	520	780	1,165	1,945	3,240
950	35	380	510	765	1,145	1,910	3,180
1,000	20	355	470	710	1,065	1,770	2,950
1,050	...	325	435	650	975	1,630	2,715
1,100	...	255	345	515	770	1,285	2,145
1,150	...	205	275	410	615	1,030	1,715
1,200	...	165	220	330	495	825	1,370
1,250	...	135	180	265	400	670	1,115
1,300	...	115	150	225	340	565	945
1,350	...	95	125	185	280	465	770
1,400	...	75	100	150	225	380	630
1,450	...	60	80	115	175	290	485
1,500	...	40	55	85	125	205	345

NOTES:
(1) At temperatures over 1,000°F, use only when the carbon content is 0.04% or higher.
(2) Not to be used over 800°F.

Table 2-2.2 Pressure–Temperature Ratings for Group 2.2 Materials

Nominal Designation	Forgings	Castings	Plates
16Cr–12Ni–2Mo	A182 Gr. F316 (1)	A351 Gr. CF3M (2)	A240 Gr. 316 (1)
16Cr–12Ni–2Mo	A182 Gr. F316H	A351 Gr. CF8M (1)	A240 Gr. 316H
18Cr–13Ni–3Mo	A182 Gr. F317 (1)	...	A240 Gr. 317 (1)
19Cr–10Ni–3Mo	...	A351 Gr. CG8M (3)	...

	Working Pressures by Classes, bar						
	Class						
Temp., °C	150	300	400	600	900	1500	2500
−29 to 38	19.0	49.6	66.2	99.3	148.9	248.2	413.7
50	18.4	48.1	64.2	96.2	144.3	240.6	400.9
100	16.2	42.2	56.3	84.4	126.6	211.0	351.6
150	14.8	38.5	51.3	77.0	115.5	192.5	320.8
200	13.7	35.7	47.6	71.3	107.0	178.3	297.2
250	12.1	33.4	44.5	66.8	100.1	166.9	278.1
300	10.2	31.6	42.2	63.2	94.9	158.1	263.5
325	9.3	30.9	41.2	61.8	92.7	154.4	257.4
350	8.4	30.3	40.4	60.7	91.0	151.6	252.7
375	7.4	29.9	39.8	59.8	89.6	149.4	249.0
400	6.5	29.4	39.3	58.9	88.3	147.2	245.3
425	5.5	29.1	38.9	58.3	87.4	145.7	242.9
450	4.6	28.8	38.5	57.7	86.5	144.2	240.4
475	3.7	28.7	38.2	57.3	86.0	143.4	238.9
500	2.8	28.2	37.6	56.5	84.7	140.9	235.0
538	1.4	25.2	33.4	50.0	75.2	125.5	208.9
550	...	25.0	33.3	49.8	74.8	124.9	208.0
575	...	24.0	31.9	47.9	71.8	119.7	199.5
600	...	19.9	26.5	39.8	59.7	99.5	165.9
625	...	15.8	21.1	31.6	47.4	79.1	131.8
650	...	12.7	16.9	25.3	38.0	63.3	105.5
675	...	10.3	13.8	20.6	31.0	51.6	86.0
700	...	8.4	11.2	16.8	25.1	41.9	69.8
725	...	7.0	9.3	14.0	21.0	34.9	58.2
750	...	5.9	7.8	11.7	17.6	29.3	48.9
775	...	4.6	6.2	9.0	13.7	22.8	38.0
800	...	3.5	4.8	7.0	10.5	17.4	29.2
816	...	2.8	3.8	5.9	8.6	14.1	23.8

NOTES:
(1) At temperatures over 538°C, use only when the carbon content is 0.04% or higher.
(2) Not to be used over 455°C.
(3) Not to be used over 538°C.

Table 2-2.2C Pressure–Temperature Ratings for Group 2.2 Materials

Nominal Designation	Forgings	Castings	Plates
16Cr–12Ni–2Mo	A182 Gr. F316 (1)	A351 Gr. CF3M (2)	A240 Gr. 316 (1)
16Cr–12Ni–2Mo	A182 Gr. F316H	A351 Gr. CF8M (1)	A240 Gr. 316H
18Cr–13Ni–3Mo	A182 Gr. F317 (1)	…	A240 Gr. 317 (1)
19Cr–10Ni–3Mo	…	A351 Gr. CG8M (3)	…

	Working Pressures by Classes, psig						
	Class						
Temp., °F	150	300	400	600	900	1500	2500
−20 to 100	275	720	960	1,440	2,160	3,600	6,000
200	235	620	825	1,240	1,860	3,095	5,160
300	215	560	745	1,120	1,680	2,795	4,660
400	195	515	685	1,025	1,540	2,570	4,280
500	170	480	635	955	1,435	2,390	3,980
600	140	450	600	900	1,355	2,255	3,760
650	125	440	590	885	1,325	2,210	3,680
700	110	435	580	870	1,305	2,170	3,620
750	95	425	570	855	1,280	2,135	3,560
800	80	420	565	845	1,265	2,110	3,520
850	65	420	555	835	1,255	2,090	3,480
900	50	415	555	830	1,245	2,075	3,460
950	35	385	515	775	1,160	1,930	3,220
1,000	20	365	485	725	1,090	1,820	3,030
1,050	…	360	480	720	1,080	1,800	3,000
1,100	…	305	405	610	915	1,525	2,545
1,150	…	235	315	475	710	1,185	1,970
1,200	…	185	245	370	555	925	1,545
1,250	…	145	195	295	440	735	1,230
1,300	…	115	155	235	350	585	970
1,350	…	95	130	190	290	480	800
1,400	…	75	100	150	225	380	630
1,450	…	60	80	115	175	290	485
1,500	…	40	55	85	125	205	345

NOTES:
(1) At temperatures over 1,000°F, use only when the carbon content is 0.04% or higher.
(2) Not to be used over 850°F.
(3) Not to be used over 1,000°F.

Table 2-2.3 Pressure–Temperature Ratings for Group 2.3 Materials

Nominal Designation	Forgings	Castings	Plates
18Cr–8Ni	A182 Gr. F304L (1)	...	A240 Gr. 304L (1)
16Cr–12Ni–2Mo	A182 Gr. F316L	...	A240 Gr. 316L
18Cr–13Ni–3Mo	A182 Gr. F317L	...	...

	Working Pressures by Classes, bar						
	Class						
Temp., °C	150	300	400	600	900	1500	2500
−29 to 38	15.9	41.4	55.2	82.7	124.1	206.8	344.7
50	15.3	40.0	53.4	80.0	120.1	200.1	333.5
100	13.3	34.8	46.4	69.6	104.4	173.9	289.9
150	12.0	31.4	41.9	62.8	94.2	157.0	261.6
200	11.2	29.2	38.9	58.3	87.5	145.8	243.0
250	10.5	27.5	36.6	54.9	82.4	137.3	228.9
300	10.0	26.1	34.8	52.1	78.2	130.3	217.2
325	9.3	25.5	34.0	51.0	76.4	127.4	212.3
350	8.4	25.1	33.4	50.1	75.2	125.4	208.9
375	7.4	24.8	33.0	49.5	74.3	123.8	206.3
400	6.5	24.3	32.4	48.6	72.9	121.5	202.5
425	5.5	23.9	31.8	47.7	71.6	119.3	198.8
450	4.6	23.4	31.2	46.8	70.2	117.1	195.1

NOTE: (1) Not to be used over 425°C.

Table 2-2.3C Pressure–Temperature Ratings for Group 2.3 Materials

Nominal Designation	Forgings	Castings	Plates
18Cr–8Ni	A182 Gr. F304L (1)	...	A240 Gr. 304L (1)
16Cr–12Ni–2Mo	A182 Gr. F316L	...	A240 Gr. 316L
18Cr–13Ni–3Mo	A182 Gr. F317L	...	...

	Working Pressures by Classes, psig						
	Class						
Temp., °F	150	300	400	600	900	1500	2500
−20 to 100	230	600	800	1,200	1,800	3,000	5,000
200	195	510	680	1,020	1,535	2,555	4,260
300	175	455	610	910	1,370	2,280	3,800
400	160	420	560	840	1,260	2,100	3,500
500	150	395	525	785	1,180	1,970	3,280
600	140	370	495	745	1,115	1,860	3,100
650	125	365	485	730	1,095	1,825	3,040
700	110	360	480	720	1,080	1,800	3,000
750	95	355	470	705	1,060	1,765	2,940
800	80	345	460	690	1,035	1,730	2,880
850	65	340	450	675	1,015	1,690	2,820

NOTE: (1) Not to be used over 800°F.

Table 2-2.4 Pressure–Temperature Ratings for Group 2.4 Materials

Nominal Designation	Forgings	Castings	Plates
18Cr–10Ni–Ti	A182 Gr. F321 (1)	...	A240 Gr. 321 (1)
18Cr–10Ni–Ti	A182 Gr. F321H (2)	...	A240 Gr. 321H (2)

	Working Pressures by Classes, bar						
	Class						
Temp., °C	150	300	400	600	900	1500	2500
−29 to 38	19.0	49.6	66.2	99.3	148.9	248.2	413.7
50	18.6	48.6	64.7	97.1	145.7	242.8	404.6
100	17.0	44.2	59.0	88.5	132.7	221.2	368.7
150	15.7	41.0	54.6	82.0	122.9	204.9	341.5
200	13.8	38.3	51.1	76.6	114.9	191.5	319.1
250	12.1	36.0	48.0	72.0	108.1	180.1	300.2
300	10.2	34.1	45.5	68.3	102.4	170.7	284.6
325	9.3	33.3	44.4	66.6	99.9	166.5	277.6
350	8.4	32.6	43.5	65.2	97.8	163.0	271.7
375	7.4	32.0	42.7	64.1	96.1	160.2	266.9
400	6.5	31.6	42.1	63.2	94.8	157.9	263.2
425	5.5	31.1	41.5	62.3	93.4	155.7	259.5
450	4.6	30.8	41.1	61.7	92.5	154.2	256.9
475	3.7	30.5	40.7	61.1	91.6	152.7	254.4
500	2.8	28.2	37.6	56.5	84.7	140.9	235.0
538	1.4	25.2	33.4	50.0	75.2	125.5	208.9
550	...	25.0	33.3	49.8	74.8	124.9	208.0
575	...	24.0	31.9	47.9	71.8	119.7	199.5
600	...	20.3	27.0	40.5	60.8	101.3	168.9
625	...	15.8	21.1	31.6	47.4	79.1	131.8
650	...	12.6	16.9	25.3	37.9	63.2	105.4
675	...	9.9	13.2	19.8	29.6	49.4	82.3
700	...	7.9	10.5	15.8	23.7	39.5	65.9
725	...	6.3	8.5	12.7	19.0	31.7	52.8
750	...	5.0	6.7	10.0	15.0	25.0	41.7
775	...	4.0	5.3	8.0	11.9	19.9	33.2
800	...	3.1	4.2	6.3	9.4	15.6	26.1
816	...	2.6	3.5	5.2	7.8	13.0	21.7

NOTES:
(1) Not to be used over 538°C.
(2) At temperatures over 538°C, use only if the material is heat treated to a minimum temperature of 1 095°C.

Table 2-2.4C Pressure–Temperature Ratings for Group 2.4 Materials

Nominal Designation	Forgings	Castings	Plates
18Cr–10Ni–Ti	A182 Gr. F321 (1)	...	A240 Gr. 321 (1)
18Cr–10Ni–Ti	A182 Gr. F321H (2)	...	A240 Gr. 321H (2)

	Working Pressures by Classes, psig						
	Class						
Temp., °F	150	300	400	600	900	1500	2500
−20 to 100	275	720	960	1,440	2,160	3,600	6,000
200	250	650	865	1,295	1,945	3,240	5,400
300	230	595	795	1,190	1,785	2,975	4,960
400	200	550	735	1,105	1,655	2,760	4,600
500	170	515	690	1,030	1,550	2,580	4,300
600	140	485	650	975	1,460	2,435	4,060
650	125	475	635	950	1,425	2,375	3,960
700	110	465	620	930	1,395	2,330	3,880
750	95	460	610	915	1,375	2,290	3,820
800	80	450	600	900	1,355	2,255	3,760
850	65	445	595	895	1,340	2,230	3,720
900	50	440	590	885	1,325	2,210	3,680
950	35	385	515	775	1,160	1,930	3,220
1,000	20	365	485	725	1,090	1,820	3,030
1,050	...	360	480	720	1,080	1,800	3,000
1,100	...	310	415	625	935	1,560	2,600
1,150	...	235	315	475	710	1,185	1,970
1,200	...	185	245	370	555	925	1,545
1,250	...	140	185	280	420	705	1,170
1,300	...	110	145	220	330	550	915
1,350	...	85	115	170	255	430	715
1,400	...	65	85	130	195	325	545
1,450	...	50	70	105	155	255	430
1,500	...	40	50	75	115	190	315

NOTES:
(1) Not to be used over 1,000°F.
(2) At temperatures over 1,000°F, use only if the material is heat treated to a minimum temperature of 2,000°F.

Table 2-2.5 Pressure–Temperature Ratings for Group 2.5 Materials

Nominal Designation	Forgings	Castings	Plates
18Cr–10Ni–Cb	A182 Gr. F347 (1)	...	A240 Gr. 347 (1)
18Cr–10Ni–Cb	A182 Gr. F347H (2)	...	A240 Gr. 347H (2)
18Cr–10Ni–Cb	A182 Gr. F348 (1)	...	A240 Gr. 348 (1)
18Cr–10Ni–Cb	A182 Gr. F348H (2)	...	A240 Gr. 348H (2)

	Working Pressures by Classes, bar						
	Class						
Temp., °C	150	300	400	600	900	1500	2500
−29 to 38	19.0	49.6	66.2	99.3	148.9	248.2	413.7
50	18.7	48.8	65.0	97.5	146.3	243.8	406.4
100	17.4	45.3	60.4	90.6	135.9	226.5	377.4
150	15.8	42.5	56.6	84.9	127.4	212.4	353.9
200	13.8	39.9	53.3	79.9	119.8	199.7	332.8
250	12.1	37.8	50.4	75.6	113.4	189.1	315.1
300	10.2	36.1	48.1	72.2	108.3	180.4	300.7
325	9.3	35.4	47.1	70.7	106.1	176.8	294.6
350	8.4	34.8	46.3	69.5	104.3	173.8	289.6
375	7.4	34.2	45.6	68.4	102.6	171.0	285.1
400	6.5	33.9	45.2	67.8	101.7	169.5	282.6
425	5.5	33.6	44.8	67.2	100.8	168.1	280.1
450	4.6	33.5	44.6	66.9	100.4	167.3	278.8
475	3.7	31.7	42.3	63.4	95.1	158.2	263.9
500	2.8	28.2	37.6	56.5	84.7	140.9	235.0
538	1.4	25.2	33.4	50.0	75.2	125.5	208.9
550	...	25.0	33.3	49.8	74.8	124.9	208.0
575	...	24.0	31.9	47.9	71.8	119.7	199.5
600	...	21.6	28.6	42.9	64.2	107.0	178.5
625	...	18.3	24.3	36.6	54.9	91.2	152.0
650	...	14.1	18.9	28.1	42.5	70.7	117.7
675	...	12.4	16.9	25.2	37.6	62.7	104.5
700	...	10.1	13.4	20.0	29.8	49.7	83.0
725	...	7.9	10.5	15.4	23.2	38.6	64.4
750	...	5.9	7.9	11.7	17.6	29.6	49.1
775	...	4.6	6.2	9.0	13.7	22.8	38.0
800	...	3.5	4.8	7.0	10.5	17.4	29.2
816	...	2.8	3.8	5.9	8.6	14.1	23.8

NOTES:
(1) Not to be used over 538°C.
(2) For temperatures over 538°C, use only if the material is heat treated by heating to a minimum temperature of 1 095°C.

Table 2-2.5C Pressure–Temperature Ratings for Group 2.5 Materials

Nominal Designation	Forgings	Castings	Plates
18Cr–10Ni–Cb	A182 Gr. F347 (1)	...	A240 Gr. 347 (1)
18Cr–10Ni–Cb	A182 Gr. F347H (2)	...	A240 Gr. 347H (2)
18Cr–10Ni–Cb	A182 Gr. F348 (1)	...	A240 Gr. 348 (1)
18Cr–10Ni–Cb	A182 Gr. F348H (2)	...	A240 Gr. 348H (2)

	Working Pressures by Classes, psig						
	Class						
Temp., °F	150	300	400	600	900	1500	2500
−20 to 100	275	720	960	1,440	2,160	3,600	6,000
200	255	660	885	1,325	1,985	3,310	5,520
300	230	615	820	1,235	1,850	3,085	5,140
400	200	575	770	1,150	1,730	2,880	4,800
500	170	540	725	1,085	1,625	2,710	4,520
600	140	515	690	1,030	1,550	2,580	4,300
650	125	505	675	1,015	1,520	2,530	4,220
700	110	495	660	995	1,490	2,485	4,140
750	95	490	655	985	1,475	2,460	4,100
800	80	485	650	975	1,460	2,435	4,060
850	65	485	645	970	1,455	2,425	4,040
900	50	450	600	900	1,350	2,245	3,745
950	35	385	515	775	1,160	1,930	3,220
1,000	20	365	485	725	1,090	1,820	3,030
1,050	...	360	480	720	1,080	1,800	3,000
1,100	...	325	430	645	965	1,610	2,685
1,150	...	275	365	550	825	1,370	2,285
1,200	...	205	275	410	620	1,030	1,715
1,250	...	180	245	365	545	910	1,515
1,300	...	140	185	275	410	685	1,145
1,350	...	105	140	205	310	515	860
1,400	...	75	100	150	225	380	630
1,450	...	60	80	115	175	290	485
1,500	...	40	55	85	125	205	345

NOTES:
(1) Not to be used over 1,000°F.
(2) For temperatures over 1,000°F use only if the material is heat treated by heating to a minimum temperature of 2,000°F.

Table 2-2.6 Pressure–Temperature Ratings for Group 2.6 Materials

Nominal Designation	Forgings	Castings	Plates
23Cr–12Ni	...	...	A240 Gr. 309H

	Working Pressures by Classes, bar						
	Class						
Temp., °C	150	300	400	600	900	1500	2500
−29 to 38	19.0	49.6	66.2	99.3	148.9	248.2	413.7
50	18.5	48.3	64.4	96.6	144.9	241.5	402.5
100	16.5	43.1	57.5	86.2	129.3	215.5	359.2
150	15.3	40.0	53.3	80.0	120.0	200.0	333.3
200	13.8	37.8	50.3	75.5	113.3	188.8	314.7
250	12.1	36.1	48.1	72.1	108.2	180.4	300.6
300	10.2	34.8	46.4	69.6	104.4	173.9	289.9
325	9.3	34.2	45.7	68.5	102.7	171.2	285.4
350	8.4	33.8	45.1	67.6	101.4	169.0	281.7
375	7.4	33.4	44.5	66.8	100.1	166.9	278.2
400	6.5	33.1	44.1	66.1	99.2	165.4	275.6
425	5.5	32.6	43.5	65.3	97.9	163.1	271.9
450	4.6	32.2	42.9	64.4	96.5	160.9	268.2
475	3.7	31.7	42.3	63.4	95.1	158.2	263.9
500	2.8	28.2	37.6	56.5	84.7	140.9	235.0
538	1.4	25.2	33.4	50.0	75.2	125.5	208.9
550	...	25.0	33.3	49.8	74.8	124.9	208.0
575	...	22.2	29.6	44.4	66.5	110.9	184.8
600	...	16.8	22.4	33.5	50.3	83.9	139.8
625	...	12.5	16.7	25.0	37.5	62.5	104.2
650	...	9.4	12.5	18.7	28.1	46.8	78.0
675	...	7.2	9.6	14.5	21.7	36.2	60.3
700	...	5.5	7.3	11.0	16.5	27.5	45.9
725	...	4.3	5.8	8.7	13.0	21.6	36.0
750	...	3.4	4.6	6.8	10.2	17.1	28.4
775	...	2.7	3.6	5.4	8.1	13.5	22.4
800	...	2.1	2.8	4.2	6.3	10.5	17.5
816	...	1.8	2.4	3.5	5.3	8.9	14.8

Table 2-2.6C Pressure–Temperature Ratings for Group 2.6 Materials

Nominal Designation	Forgings	Castings	Plates
23Cr–12Ni	...	...	A240 Gr. 309H

Temp., °F	Working Pressures by Classes, psig						
	Class						
	150	300	400	600	900	1500	2500
−20 to 100	275	720	960	1,440	2,160	3,600	6,000
200	240	630	840	1,260	1,895	3,155	5,260
300	225	580	775	1,160	1,740	2,905	4,840
400	200	545	725	1,090	1,635	2,725	4,540
500	170	520	690	1,035	1,555	2,590	4,320
600	140	500	665	1,000	1,500	2,495	4,160
650	125	490	655	985	1,475	2,460	4,100
700	110	485	645	970	1,455	2,425	4,040
750	95	480	640	960	1,440	2,400	4,000
800	80	475	630	945	1,420	2,365	3,940
850	65	465	620	930	1,395	2,330	3,880
900	50	450	600	900	1,350	2,245	3,745
950	35	385	515	775	1,160	1,930	3,220
1,000	20	365	485	725	1,090	1,820	3,030
1,050	...	355	470	705	1,060	1,765	2,945
1,100	...	260	345	520	780	1,305	2,170
1,150	...	190	250	375	565	945	1,570
1,200	...	135	185	275	410	685	1,145
1,250	...	105	135	205	310	515	855
1,300	...	75	100	150	225	375	630
1,350	...	60	80	115	175	290	485
1,400	...	45	60	90	135	225	370
1,450	...	35	45	70	105	170	285
1,500	...	25	35	50	75	130	215

Table 2-2.7 Pressure–Temperature Ratings for Group 2.7 Materials

Nominal Designation	Forgings	Castings	Plates
25Cr–20Ni	A182 Gr. F310 (1), (2)	...	A240 Gr. 310H

	Working Pressures by Classes, bar						
	Class						
Temp., °C	150	300	400	600	900	1500	2500
−29 to 38	19.0	49.6	66.2	99.3	148.9	248.2	413.7
50	18.5	48.4	64.5	96.7	145.1	241.8	403.1
100	16.6	43.4	57.9	86.8	130.2	217.0	361.6
150	15.3	40.0	53.3	80.0	120.0	200.0	333.3
200	13.8	37.6	50.1	75.2	112.8	188.0	313.4
250	12.1	35.8	47.7	71.5	107.3	178.8	298.1
300	10.2	34.5	45.9	68.9	103.4	172.3	287.2
325	9.3	33.9	45.2	67.7	101.6	169.3	282.2
350	8.4	33.3	44.4	66.6	99.9	166.5	277.6
375	7.4	32.9	43.8	65.7	98.6	164.3	273.8
400	6.5	32.4	43.2	64.8	97.3	162.1	270.2
425	5.5	32.1	42.8	64.2	96.4	160.6	267.7
450	4.6	31.7	42.2	63.4	95.1	158.4	264.0
475	3.7	31.2	41.7	62.5	93.7	156.2	260.3
500	2.8	28.2	37.6	56.5	84.7	140.9	235.0
538	1.4	25.2	33.4	50.0	75.2	125.5	208.9
550	...	25.0	33.3	49.8	74.8	124.9	208.0
575	...	22.2	29.6	44.4	66.5	110.9	184.8
600	...	16.8	22.4	33.5	50.3	83.9	139.8
625	...	12.5	16.7	25.0	37.5	62.5	104.2
650	...	9.4	12.5	18.7	28.1	46.8	78.0
675	...	7.2	9.6	14.5	21.7	36.2	60.3
700	...	5.5	7.3	11.0	16.5	27.5	45.9
725	...	4.3	5.8	8.7	13.0	21.6	36.0
750	...	3.4	4.6	6.8	10.2	17.1	28.4
775	...	2.7	3.5	5.3	8.0	13.3	22.1
800	...	2.1	2.8	4.1	6.2	10.3	17.2
816	...	1.8	2.4	3.5	5.3	8.9	14.8

NOTES:
(1) At temperatures over 538°C, use only when the carbon content is 0.04% or higher.
(2) Service temperatures of 565°C and above should be used only when assurance is provided that grain size is not finer than ASTM No. 6.

Table 2-2.7C Pressure–Temperature Ratings for Group 2.7 Materials

Nominal Designation	Forgings	Castings	Plates
25Cr–20Ni	A182 Gr. F310 (1), (2)	...	A240 Gr. 310H

	Working Pressures by Classes, psig						
	Class						
Temp., °F	150	300	400	600	900	1500	2500
−20 to 100	275	720	960	1,440	2,160	3,600	6,000
200	245	635	850	1,270	1,910	3,180	5,300
300	225	580	775	1,160	1,740	2,905	4,840
400	200	540	725	1,085	1,625	2,710	4,520
500	170	515	685	1,025	1,540	2,570	4,280
600	140	495	660	990	1,485	2,470	4,120
650	125	485	645	970	1,455	2,425	4,040
700	110	480	635	955	1,435	2,390	3,980
750	95	470	625	940	1,410	2,350	3,920
800	80	465	620	930	1,395	2,330	3,880
850	65	460	610	915	1,375	2,290	3,820
900	50	450	600	900	1,350	2,245	3,745
950	35	385	515	775	1,160	1,930	3,220
1,000	20	365	485	725	1,090	1,820	3,030
1,050	...	355	470	705	1,060	1,765	2,945
1,100	...	260	345	520	780	1,305	2,170
1,150	...	190	250	375	565	945	1,570
1,200	...	135	185	275	410	685	1,145
1,250	...	105	135	205	310	515	855
1,300	...	75	100	150	225	375	630
1,350	...	60	80	115	175	290	485
1,400	...	45	60	90	135	225	370
1,450	...	35	45	65	100	165	275
1,500	...	25	35	50	75	130	215

NOTES:
(1) At temperatures over 1,000°F, use only when the carbon content is 0.04% or higher.
(2) Service temperatures of 1,050°F and above should be used only when assurance is provided that grain size is not finer than ASTM No. 6.

Table 2-2.8 Pressure–Temperature Ratings for Group 2.8 Materials

Nominal Designation	Forgings	Castings	Plates
20Cr–18Ni–6Mo	A182 Gr. F44	A351 Gr. CK3MCuN	A240 Gr. S31254
22Cr–5Ni–3Mo–N	A182 Gr. F51 (1)	...	A240 Gr. S31803 (1)
25Cr–7Ni–4Mo–N	A182 Gr. F53 (1)	...	A240 Gr. S32750 (1)
24Cr–10Ni–4Mo–V	...	A995 Gr. CE8MN (1)	...
25Cr–5Ni–2Mo–3Cu–N	...	A995 Gr. CD4MCuN (1)	...
25Cr–7Ni–3.5Mo–W–Cb	...	A995 Gr. CD3MWCuN (1)	...
25Cr–7Ni–3.5Mo–N–Cu–W	A182 Gr. F55 (1)	...	A240 Gr. S32760 (1)

	Working Pressures by Classes, bar						
	Class						
Temp., °C	150	300	400	600	900	1500	2500
−29 to 38	20.0	51.7	68.9	103.4	155.1	258.6	430.9
50	19.5	51.7	68.9	103.4	155.1	258.6	430.9
100	17.7	50.7	67.5	101.3	152.0	253.3	422.2
150	15.8	45.9	61.2	91.9	137.8	229.6	382.7
200	13.8	42.7	56.9	85.3	128.0	213.3	355.4
250	12.1	40.5	53.9	80.9	121.4	202.3	337.2
300	10.2	38.9	51.8	77.7	116.6	194.3	323.8
325	9.3	38.2	50.9	76.3	114.5	190.8	318.0
350	8.4	37.6	50.2	75.3	112.9	188.2	313.7
375	7.4	37.4	49.8	74.7	112.1	186.8	311.3
400	6.5	36.5	48.9	73.3	109.8	183.1	304.9

NOTE: (1) This steel may become brittle after service at moderately elevated temperatures. Not to be used over 315°C.

Table 2-2.8C Pressure–Temperature Ratings for Group 2.8 Materials

Nominal Designation	Forgings	Castings	Plates
20Cr–18Ni–6Mo	A182 Gr. F44	A351 Gr. CK3MCuN	A240 Gr. S31254
22Cr–5Ni–3Mo–N	A182 Gr. F51 (1)	...	A240 Gr. S31803 (1)
25Cr–7Ni–4Mo–N	A182 Gr. F53 (1)	...	A240 Gr. S32750 (1)
24Cr–10Ni–4Mo–V	...	A995 Gr. CE8MN (1)	...
25Cr–5Ni–2Mo–3Cu–N	...	A995 Gr. CD4MCuN (1)	...
25Cr–7Ni–3.5Mo–W–Cb	...	A995 Gr. CD3MWCuN (1)	...
25Cr–7Ni–3.5Mo–N–Cu–W	A182 Gr. F55 (1)	...	A240 Gr. S32760 (1)

	Working Pressures by Classes, psig						
	Class						
Temp., °F	150	300	400	600	900	1500	2500
−20 to 100	290	750	1,000	1,500	2,250	3,750	6,250
200	260	745	990	1,490	2,230	3,720	6,200
300	230	665	890	1,335	2,000	3,335	5,560
400	200	615	820	1,230	1,845	3,070	5,120
500	170	580	775	1,160	1,740	2,905	4,840
600	140	555	740	1,115	1,670	2,785	4,640
650	125	545	730	1,095	1,640	2,735	4,560
700	110	540	725	1,085	1,625	2,710	4,520
750	95	530	710	1,065	1,595	2,660	4,430

NOTE: (1) This steel may become brittle after service at moderately elevated temperatures. Not to be used over 600°F.

Table 2-2.9 Pressure–Temperature Ratings for Group 2.9 Materials

Nominal Designation	Forgings	Castings	Plates
23Cr–12Ni	…	…	A240 Gr. 309S (1)–(3)
25Cr–20Ni	…	…	A240 Gr. 310S (1)–(3)

	Working Pressures by Classes, bar						
	Class						
Temp., °C	150	300	400	600	900	1500	2500
−29 to 38	19.0	49.6	66.2	99.3	148.9	248.2	413.7
50	18.5	48.3	64.4	96.6	144.9	241.5	402.5
100	16.5	43.1	57.5	86.2	129.3	215.5	359.2
150	15.3	40.0	53.3	80.0	120.0	200.0	333.3
200	13.8	37.6	50.1	75.2	112.8	188.0	313.4
250	12.1	35.8	47.7	71.5	107.3	178.8	298.1
300	10.2	34.5	45.9	68.9	103.4	172.3	287.2
325	9.3	33.9	45.2	67.7	101.6	169.3	282.2
350	8.4	33.3	44.4	66.6	99.9	166.5	277.6
375	7.4	32.9	43.8	65.7	98.6	164.3	273.8
400	6.5	32.4	43.2	64.8	97.3	162.1	270.2
425	5.5	32.1	42.8	64.2	96.4	160.6	267.7
450	4.6	31.7	42.2	63.4	95.1	158.4	264.0
475	3.7	31.2	41.7	62.5	93.7	156.2	260.3
500	2.8	28.2	37.6	56.5	84.7	140.9	235.0
538	1.4	23.4	31.2	46.8	70.2	117.0	195.0
550	…	20.5	27.3	41.0	61.5	102.5	170.8
575	…	15.1	20.1	30.2	45.3	75.5	125.8
600	…	11.0	14.7	22.1	33.1	55.1	91.9
625	…	8.1	10.9	16.3	24.4	40.7	67.9
650	…	5.8	7.8	11.6	17.4	29.1	48.5
675	…	3.7	4.9	7.4	11.1	18.4	30.7
700	…	2.2	2.9	4.3	6.5	10.8	18.0
725	…	1.4	1.8	2.7	4.1	6.8	11.4
750	…	1.0	1.4	2.1	3.1	5.2	8.6
775	…	0.8	1.1	1.6	2.5	4.1	6.8
800	…	0.6	0.8	1.2	1.8	3.0	5.0
816	…	0.5	0.6	0.9	1.4	2.4	3.9

NOTES:

(1) At temperatures over 538°C, use only when the carbon content is 0.04% or higher.

(2) At temperatures above 538°C, use only if the material is solution heat treated to the minimum temperature specified in the specification but not lower than 1 035°C, and quenching in water or rapidly cooling by other means.

(3) This material should be used for service temperatures 565°C and above only when assurance is provided that grain size is not finer than ASTM No. 6.

Table 2-2.9C Pressure–Temperature Ratings for Group 2.9 Materials

Nominal Designation	Forgings	Castings	Plates
23Cr–12Ni	...	...	A240 Gr. 309S (1)–(3)
25Cr–20Ni	...	...	A240 Gr. 310S (1)–(3)

	Working Pressures by Classes, psig						
	Class						
Temp., °F	150	300	400	600	900	1500	2500
−20 to 100	275	720	960	1,440	2,160	3,600	6,000
200	240	630	840	1,260	1,895	3,155	5,260
300	225	580	775	1,160	1,740	2,905	4,840
400	200	540	725	1,085	1,625	2,710	4,520
500	170	515	685	1,025	1,540	2,570	4,280
600	140	495	660	990	1,485	2,470	4,120
650	125	485	645	970	1,455	2,425	4,040
700	110	480	635	955	1,435	2,390	3,980
750	95	470	625	940	1,410	2,350	3,920
800	80	465	620	930	1,395	2,330	3,880
850	65	460	610	915	1,375	2,290	3,820
900	50	450	600	900	1,350	2,245	3,745
950	35	385	515	775	1,160	1,930	3,220
1,000	20	340	455	680	1,020	1,695	2,830
1,050	...	245	325	485	730	1,215	2,030
1,100	...	170	230	345	515	855	1,430
1,150	...	125	165	245	370	615	1,030
1,200	...	85	115	170	255	430	715
1,250	...	50	70	105	155	255	430
1,300	...	25	35	55	80	135	230
1,350	...	15	25	35	50	85	145
1,400	...	15	20	25	40	70	115
1,450	...	10	15	20	30	50	85
1,500	...	5	10	15	20	35	55

NOTES:

(1) At temperatures over 1,000°F, use only when the carbon content is 0.04% or higher.

(2) At temperatures above 1,000°F, use only if the material is solution heat treated to the minimum temperature specified in the specification, but not lower than 1,900°F, and quenching in water or rapidly cooling by other means.

(3) This material should be used for service temperatures 1,050°F and above only when assurance is provided that grain size is not finer than ASTM No. 6.

Table 2-2.10 Pressure–Temperature Ratings for Group 2.10 Materials

Nominal Designation	Forgings	Castings	Plates
25Cr–12Ni	...	A351 Gr. CH8 (1)	...
25Cr–12Ni	...	A351 Gr. CH20 (1)	...

	Working Pressures by Classes, bar						
	Class						
Temp., °C	150	300	400	600	900	1500	2500
−29 to 38	17.8	46.3	61.8	92.7	139.0	231.7	386.1
50	17.0	44.5	59.3	89.0	133.4	222.4	370.6
100	14.4	37.5	50.0	75.1	112.6	187.7	312.8
150	13.4	34.9	46.5	69.8	104.7	174.4	290.7
200	12.9	33.5	44.7	67.1	100.6	167.7	279.5
250	12.1	32.6	43.5	65.2	97.8	163.1	271.8
300	10.2	31.7	42.3	63.4	95.2	158.6	264.3
325	9.3	31.2	41.6	62.4	93.6	156.1	260.1
350	8.4	30.6	40.8	61.2	91.7	152.9	254.8
375	7.4	29.8	39.8	59.7	89.5	149.2	248.6
400	6.5	29.1	38.8	58.2	87.3	145.5	242.4
425	5.5	28.3	37.8	56.7	85.0	141.7	236.2
450	4.6	27.6	36.8	55.2	82.8	138.0	230.0
475	3.7	26.7	35.6	53.5	80.2	133.7	222.8
500	2.8	25.8	34.5	51.7	77.5	129.2	215.3
538	1.4	23.3	31.1	46.6	70.0	116.6	194.4
550	...	21.9	29.2	43.8	65.7	109.5	182.5
575	...	18.5	24.6	37.0	55.5	92.4	154.0
600	...	14.5	19.4	29.0	43.5	72.6	121.0
625	...	11.4	15.2	22.8	34.3	57.1	95.2
650	...	8.9	11.9	17.8	26.7	44.5	74.1
675	...	7.0	9.3	14.0	20.9	34.9	58.2
700	...	5.7	7.6	11.3	17.0	28.3	47.2
725	...	4.6	6.1	9.1	13.7	22.8	38.0
750	...	3.5	4.7	7.0	10.5	17.5	29.2
775	...	2.6	3.4	5.1	7.7	12.8	21.4
800	...	2.0	2.7	4.0	6.1	10.1	16.9
816	...	1.9	2.5	3.8	5.7	9.5	15.8

NOTE: (1) At temperatures over 538°C, use only when the carbon content is 0.04% or higher.

Table 2-2.10C Pressure–Temperature Ratings for Group 2.10 Materials

Nominal Designation	Forgings	Castings	Plates
25Cr–12Ni	...	A351 Gr. CH8 (1)	...
25Cr–12Ni	...	A351 Gr. CH20 (1)	...

	Working Pressures by Classes, psig						
	Class						
Temp., °F	150	300	400	600	900	1500	2500
−20 to 100	260	670	895	1,345	2,015	3,360	5,600
200	210	550	735	1,100	1,650	2,750	4,580
300	195	505	675	1,015	1,520	2,530	4,220
400	185	485	645	970	1,455	2,425	4,040
500	170	470	625	940	1,410	2,350	3,920
600	140	455	610	910	1,370	2,280	3,800
650	125	445	595	895	1,340	2,230	3,720
700	110	435	580	870	1,305	2,170	3,620
750	95	420	565	845	1,265	2,110	3,520
800	80	410	545	820	1,230	2,050	3,420
850	65	400	530	795	1,195	1,990	3,320
900	50	385	510	770	1,150	1,920	3,200
950	35	370	495	740	1,110	1,850	3,080
1,000	20	340	450	675	1,015	1,690	2,820
1,050	...	290	390	585	875	1,455	2,430
1,100	...	225	295	445	670	1,115	1,855
1,150	...	170	230	345	515	855	1,430
1,200	...	130	175	260	390	650	1,085
1,250	...	100	135	200	300	495	830
1,300	...	80	105	160	235	395	655
1,350	...	60	80	125	185	310	515
1,400	...	45	60	90	135	225	370
1,450	...	30	40	60	95	155	255
1,500	...	25	35	55	80	135	230

NOTE: (1) At temperatures over 1,000°F, use only when the carbon content is 0.04% or higher.

Table 2-2.11 Pressure–Temperature Ratings for Group 2.11 Materials

Nominal Designation	Forgings	Castings	Plates
18Cr–10Ni–Cb	...	A351 Gr. CF8C (1)	...

	Working Pressures by Classes, bar						
	Class						
Temp., °C	150	300	400	600	900	1500	2500
−29 to 38	19.0	49.6	66.2	99.3	148.9	248.2	413.7
50	18.7	48.8	65.0	97.5	146.3	243.8	406.4
100	17.4	45.3	60.4	90.6	135.9	226.5	377.4
150	15.8	42.5	56.6	84.9	127.4	212.4	353.9
200	13.8	39.9	53.3	79.9	119.8	199.7	332.8
250	12.1	37.8	50.4	75.6	113.4	189.1	315.1
300	10.2	36.1	48.1	72.2	108.3	180.4	300.7
325	9.3	35.4	47.1	70.7	106.1	176.8	294.6
350	8.4	34.8	46.3	69.5	104.3	173.8	289.6
375	7.4	34.2	45.6	68.4	102.6	171.0	285.1
400	6.5	33.9	45.2	67.8	101.7	169.5	282.6
425	5.5	33.6	44.8	67.2	100.8	168.1	280.1
450	4.6	33.5	44.6	66.9	100.4	167.3	278.8
475	3.7	31.7	42.3	63.4	95.1	158.2	263.9
500	2.8	28.2	37.6	56.5	84.7	140.9	235.0
538	1.4	25.2	33.4	50.0	75.2	125.5	208.9
550	...	25.0	33.3	49.8	74.8	124.9	208.0
575	...	24.0	31.9	47.9	71.8	119.7	199.5
600	...	19.8	26.4	39.6	59.4	99.0	165.1
625	...	13.9	18.5	27.7	41.6	69.3	115.5
650	...	10.3	13.7	20.6	30.9	51.5	85.8
675	...	8.0	10.6	15.9	23.9	39.8	66.3
700	...	5.6	7.5	11.2	16.8	28.1	46.8
725	...	4.0	5.3	8.0	11.9	19.9	33.1
750	...	3.1	4.1	6.2	9.3	15.5	25.8
775	...	2.5	3.3	4.9	7.4	12.3	20.4
800	...	2.0	2.7	4.0	6.1	10.1	16.9
816	...	1.9	2.5	3.8	5.7	9.5	15.8

NOTE: (1) At temperatures over 538°C, use only when the carbon content is 0.04% or higher.

Table 2-2.11C Pressure–Temperature Ratings for Group 2.11 Materials

Nominal Designation	Forgings	Castings	Plates
18Cr–10Ni–Cb	...	A351 Gr. CF8C (1)	...

	Working Pressures by Classes, psig						
	Class						
Temp., °F	150	300	400	600	900	1500	2500
−20 to 100	275	720	960	1,440	2,160	3,600	6,000
200	255	660	885	1,325	1,985	3,310	5,520
300	230	615	820	1,235	1,850	3,085	5,140
400	200	575	770	1,150	1,730	2,880	4,800
500	170	540	725	1,085	1,625	2,710	4,520
600	140	515	690	1,030	1,550	2,580	4,300
650	125	505	675	1,015	1,520	2,530	4,220
700	110	495	660	995	1,490	2,485	4,140
750	95	490	655	985	1,475	2,460	4,100
800	80	485	650	975	1,460	2,435	4,060
850	65	485	645	970	1,455	2,425	4,040
900	50	450	600	900	1,350	2,245	3,745
950	35	385	515	775	1,160	1,930	3,220
1,000	20	365	485	725	1,090	1,820	3,030
1,050	...	360	480	720	1,080	1,800	3,000
1,100	...	310	415	625	935	1,560	2,600
1,150	...	210	280	420	625	1,045	1,745
1,200	...	150	200	300	455	755	1,255
1,250	...	115	150	225	340	565	945
1,300	...	75	100	150	225	375	630
1,350	...	50	70	105	155	255	430
1,400	...	40	55	80	125	205	345
1,450	...	30	40	60	95	155	255
1,500	...	25	35	55	80	135	230

NOTE: (1) At temperatures over 1,000°F, use only when the carbon content is 0.04% or higher.

Table 2-2.12 Pressure–Temperature Ratings for Group 2.12 Materials

Nominal Designation	Forgings	Castings	Plates
25Cr–20Ni	...	A351 Gr. CK20 (1)	...

	Working Pressures by Classes, bar						
	Class						
Temp., °C	150	300	400	600	900	1500	2500
−29 to 38	17.8	46.3	61.8	92.7	139.0	231.7	386.1
50	17.0	44.5	59.3	89.0	133.4	222.4	370.6
100	14.4	37.5	50.0	75.1	112.6	187.7	312.8
150	13.4	34.9	46.5	69.8	104.7	174.4	290.7
200	12.9	33.5	44.7	67.1	100.6	167.7	279.5
250	12.1	32.6	43.5	65.2	97.8	163.1	271.8
300	10.2	31.7	42.3	63.4	95.2	158.6	264.3
325	9.3	31.2	41.6	62.4	93.6	156.1	260.1
350	8.4	30.6	40.8	61.2	91.7	152.9	254.8
375	7.4	29.8	39.8	59.7	89.5	149.2	248.6
400	6.5	29.1	38.8	58.2	87.3	145.5	242.4
425	5.5	28.3	37.8	56.7	85.0	141.7	236.2
450	4.6	27.6	36.8	55.2	82.8	138.0	230.0
475	3.7	26.7	35.6	53.5	80.2	133.7	222.8
500	2.8	25.8	34.5	51.7	77.5	129.2	215.3
538	1.4	23.3	31.1	46.6	70.0	116.6	194.4
550	...	22.9	30.6	45.9	68.8	114.7	191.2
575	...	21.7	28.9	43.3	65.0	108.3	180.4
600	...	19.4	25.9	38.8	58.2	97.1	161.8
625	...	16.8	22.4	33.7	50.5	84.1	140.2
650	...	14.1	18.8	28.1	42.2	70.4	117.3
675	...	11.5	15.4	23.0	34.6	57.6	96.0
700	...	8.8	11.7	17.5	26.3	43.8	73.0
725	...	6.3	8.5	12.7	19.0	31.7	52.9
750	...	4.5	6.0	8.9	13.4	22.3	37.2
775	...	3.1	4.2	6.3	9.4	15.7	26.2
800	...	2.3	3.1	4.6	6.9	11.4	19.1
816	...	1.9	2.5	3.8	5.7	9.5	15.8

NOTE: (1) At temperatures over 538°C, use only when the carbon content is 0.04% or higher.

Table 2-2.12C Pressure–Temperature Ratings for Group 2.12 Materials

Nominal Designation	Forgings	Castings	Plates
25Cr–20Ni	...	A351 Gr. CK20 (1)	...

	Working Pressures by Classes, psig						
	Class						
Temp., °F	150	300	400	600	900	1500	2500
−20 to 100	260	670	895	1,345	2,015	3,360	5,600
200	210	550	735	1,100	1,650	2,750	4,580
300	195	505	675	1,015	1,520	2,530	4,220
400	185	485	645	970	1,455	2,425	4,040
500	170	470	625	940	1,410	2,350	3,920
600	140	455	610	910	1,370	2,280	3,800
650	125	445	595	895	1,340	2,230	3,720
700	110	435	580	870	1,305	2,170	3,620
750	95	420	565	845	1,265	2,110	3,520
800	80	410	545	820	1,230	2,050	3,420
850	65	400	530	795	1,195	1,990	3,320
900	50	385	510	770	1,150	1,920	3,200
950	35	370	495	740	1,110	1,850	3,080
1,000	20	340	450	675	1,015	1,690	2,820
1,050	...	325	435	650	975	1,630	2,715
1,100	...	290	390	585	875	1,455	2,430
1,150	...	250	335	500	750	1,250	2,085
1,200	...	205	275	410	615	1,030	1,715
1,250	...	165	220	330	495	825	1,370
1,300	...	120	160	240	360	600	1,000
1,350	...	80	110	165	245	410	685
1,400	...	55	75	110	165	275	455
1,450	...	40	50	75	115	190	315
1,500	...	25	35	55	80	135	230

NOTE: (1) At temperatures over 1,000°F, use only when the carbon content is 0.04% or higher.

(20) **Table 2-3.1 Pressure–Temperature Ratings for Group 3.1 Materials**

Nominal Designation	Forgings	Castings	Plates
35Ni–35Fe–20Cr–Cb	A182 Gr. N08020 (1)	...	A240 Gr. N08020 (1)
35Ni–35Fe–20Cr–Cb	B462 Gr. N08020 (1)	...	B463 Gr. N08020 (1)

	Working Pressures by Classes, bar						
	Class						
Temp., °C	150	300	400	600	900	1500	2500
−29 to 38	20.0	51.7	68.9	103.4	155.1	258.6	430.9
50	19.5	51.7	68.9	103.4	155.1	258.6	430.9
100	17.7	50.9	67.8	101.7	152.6	254.4	423.9
150	15.8	48.9	65.3	97.9	146.8	244.7	407.8
200	13.8	47.2	62.9	94.3	141.5	235.8	392.9
250	12.1	45.5	60.7	91.0	136.5	227.5	379.2
300	10.2	42.9	57.0	85.7	128.6	214.4	357.1
325	9.3	41.4	55.0	82.6	124.0	206.6	344.3
350	8.4	40.3	53.6	80.4	120.7	201.1	335.3
375	7.4	38.9	51.6	77.6	116.5	194.1	323.2
400	6.5	36.5	48.9	73.3	109.8	183.1	304.9
425	5.5	35.2	46.5	70.0	105.1	175.1	291.6

NOTE: (1) Use annealed material only.

(20) **Table 2-3.1C Pressure–Temperature Ratings for Group 3.1 Materials**

Nominal Designation	Forgings	Castings	Plates
35Ni–35Fe–20Cr–Cb	A182 Gr. N08020 (1)	...	A240 Gr. N08020 (1)
35Ni–35Fe–20Cr–Cb	B462 Gr. N08020 (1)	...	B463 Gr. N08020 (1)

	Working Pressures by Classes, psig						
	Class						
Temp., °F	150	300	400	600	900	1500	2500
−20 to 100	290	750	1,000	1,500	2,250	3,750	6,250
200	260	740	990	1,485	2,225	3,710	6,180
300	230	710	945	1,420	2,130	3,550	5,920
400	200	680	910	1,365	2,045	3,410	5,680
500	170	655	875	1,310	1,965	3,275	5,460
600	140	605	805	1,210	1,815	3,025	5,040
650	125	590	785	1,175	1,765	2,940	4,905
700	110	570	755	1,135	1,705	2,840	4,730
750	95	530	710	1,065	1,595	2,660	4,430
800	80	510	675	1,015	1,525	2,540	4,230

NOTE: (1) Use annealed material only.

Table 2-3.2 Pressure–Temperature Ratings for Group 3.2 Materials

Nominal Designation	Forgings	Castings	Plates
99.0Ni	B564 Gr. N02200 (1)	…	B162 Gr. N02200 (1)

	Working Pressures by Classes, bar						
	Class						
Temp., °C	150	300	400	600	900	1500	2500
−29 to 38	12.7	33.1	44.1	66.2	99.3	165.5	275.8
50	12.7	33.1	44.1	66.2	99.3	165.5	275.8
100	12.7	33.1	44.1	66.2	99.3	165.5	275.8
150	12.7	33.1	44.1	66.2	99.3	165.5	275.8
200	12.7	33.1	44.1	66.2	99.3	165.5	275.8
250	12.1	31.6	42.1	63.2	94.8	158.0	263.4
300	10.2	29.2	39.0	58.5	87.7	146.2	243.7
325	7.2	18.8	25.0	37.6	56.4	93.9	156.5

NOTE: (1) Use annealed material only.

Table 2-3.2C Pressure–Temperature Ratings for Group 3.2 Materials

Nominal Designation	Forgings	Castings	Plates
99.0Ni	B564 Gr. N02200 (1)	…	B162 Gr. N02200 (1)

	Working Pressures by Classes, psig						
	Class						
Temp., °F	150	300	400	600	900	1500	2500
−20 to 100	185	480	640	960	1,440	2,400	4,000
200	185	480	640	960	1,440	2,400	4,000
300	185	480	640	960	1,440	2,400	4,000
400	185	480	640	960	1,440	2,400	4,000
500	170	455	605	905	1,360	2,270	3,780
600	140	415	550	825	1,240	2,065	3,440

NOTE: (1) Use annealed material only.

Table 2-3.3 Pressure–Temperature Ratings for Group 3.3 Materials

Nominal Designation	Forgings	Castings	Plates
99.0Ni–Low C	...	...	B162 Gr. N02201 (1)

	Working Pressures by Classes, bar						
	Class						
Temp., °C	**150**	**300**	**400**	**600**	**900**	**1500**	**2500**
−29 to 38	6.3	16.5	22.1	33.1	49.6	82.7	137.9
50	6.3	16.4	21.9	32.8	49.2	82.0	136.7
100	6.1	15.8	21.1	31.7	47.5	79.2	132.0
150	6.0	15.6	20.7	31.1	46.7	77.8	129.6
200	6.0	15.6	20.7	31.1	46.7	77.8	129.6
250	6.0	15.6	20.7	31.1	46.7	77.8	129.6
300	6.0	15.6	20.7	31.1	46.7	77.8	129.6
325	5.9	15.5	20.7	31.0	46.5	77.5	129.2
350	5.9	15.4	20.5	30.8	46.2	76.9	128.2
375	5.9	15.4	20.5	30.7	46.1	76.8	128.0
400	5.8	15.2	20.3	30.4	45.6	76.1	126.8
425	5.5	14.9	19.9	29.8	44.7	74.6	124.3
450	4.6	14.6	19.5	29.2	43.8	73.1	121.8
475	3.7	14.3	19.1	28.6	43.0	71.6	119.3
500	2.8	13.8	18.4	27.6	41.4	69.0	115.1
538	1.4	13.1	17.4	26.1	39.2	65.4	108.9
550	...	9.8	13.1	19.6	29.5	49.1	81.8
575	...	5.4	7.1	10.7	16.1	26.8	44.6
600	...	4.4	5.9	8.9	13.3	22.2	37.0
625	...	3.4	4.6	6.9	10.3	17.2	28.7
650	...	2.8	3.8	5.7	8.5	14.2	23.6

NOTE: (1) Use annealed material only.

Table 2-3.3C Pressure–Temperature Ratings for Group 3.3 Materials

Nominal Designation	Forgings	Castings	Plates
99.0Ni–Low C	...	...	B162 Gr. N02201 (1)

	Working Pressures by Classes, psig						
	Class						
Temp., °F	150	300	400	600	900	1500	2500
−20 to 100	90	240	320	480	720	1,200	2,000
200	90	230	305	460	690	1,150	1,920
300	85	225	300	450	675	1,130	1,880
400	85	225	300	450	675	1,130	1,880
500	85	225	300	450	675	1,130	1,880
600	85	225	300	450	675	1,130	1,880
650	85	225	300	445	670	1,115	1,860
700	85	225	300	445	670	1,115	1,860
750	85	220	295	440	660	1,105	1,840
800	80	215	290	430	650	1,080	1,800
850	65	210	280	420	635	1,055	1,760
900	50	205	275	415	620	1,030	1,720
950	35	195	260	395	590	985	1,640
1,000	20	190	255	380	570	950	1,580
1,050	...	80	110	165	245	410	685
1,100	...	70	90	135	205	345	570
1,150	...	50	70	105	155	255	430
1,200	...	40	55	80	125	205	345

NOTE:
(1) Use annealed material only.

Table 2-3.4 Pressure–Temperature Ratings for Group 3.4 Materials

Nominal Designation	Forgings	Castings	Plates
67Ni–30Cu	B564 Gr. N04400 (1)	...	B127 Gr. N04400 (1)

	Working Pressures by Classes, bar						
	Class						
Temp., °C	150	300	400	600	900	1500	2500
−29 to 38	15.9	41.4	55.2	82.7	124.1	206.8	344.7
50	15.4	40.2	53.7	80.5	120.7	201.2	335.3
100	13.8	35.9	47.9	71.9	107.8	179.7	299.5
150	12.9	33.7	45.0	67.5	101.2	168.7	281.1
200	12.5	32.7	43.6	65.4	98.1	163.5	272.4
250	12.1	32.6	43.5	65.2	97.8	163.0	271.7
300	10.2	32.6	43.5	65.2	97.8	163.0	271.7
325	9.3	32.6	43.5	65.2	97.8	163.0	271.7
350	8.4	32.6	43.4	65.1	97.7	162.8	271.3
375	7.4	32.4	43.2	64.8	97.2	161.9	269.9
400	6.5	32.1	42.8	64.2	96.2	160.4	267.4
425	5.5	31.6	42.2	63.3	94.9	158.2	263.6
450	4.6	26.9	35.9	53.8	80.7	134.5	224.2
475	3.7	20.8	27.7	41.5	62.3	103.8	173.0

NOTE: (1) Use annealed material only.

Table 2-3.4C Pressure–Temperature Ratings for Group 3.4 Materials

Nominal Designation	Forgings	Castings	Plates
67Ni–30Cu	B564 Gr. N04400 (1)	...	B127 Gr. N04400 (1)

	Working Pressures by Classes, psig						
	Class						
Temp., °F	150	300	400	600	900	1500	2500
−20 to 100	230	600	800	1,200	1,800	3,000	5,000
200	200	525	700	1,050	1,575	2,630	4,380
300	190	490	655	980	1,470	2,450	4,080
400	180	475	630	945	1,420	2,365	3,940
500	170	475	630	945	1,420	2,365	3,940
600	140	475	630	945	1,420	2,365	3,940
650	125	475	630	945	1,420	2,365	3,940
700	110	470	625	940	1,410	2,350	3,920
750	95	465	620	930	1,395	2,330	3,880
800	80	460	610	915	1,375	2,290	3,820
850	65	375	505	755	1,130	1,885	3,145
900	50	275	365	550	825	1,370	2,285

NOTE: (1) Use annealed material only.

Table 2-3.5 Pressure–Temperature Ratings for Group 3.5 Materials

Nominal Designation	Forgings	Castings	Plates
72Ni–15Cr–8Fe	B564 Gr. N06600 (1)	...	B168 Gr. N06600 (1)

	Working Pressures by Classes, bar						
	Class						
Temp., °C	150	300	400	600	900	1500	2500
−29 to 38	20.0	51.7	68.9	103.4	155.1	258.6	430.9
50	19.5	51.7	68.9	103.4	155.1	258.6	430.9
100	17.7	51.5	68.7	103.0	154.6	257.6	429.4
150	15.8	50.3	66.8	100.3	150.6	250.8	418.2
200	13.8	48.6	64.8	97.2	145.8	243.4	405.4
250	12.1	46.3	61.7	92.7	139.0	231.8	386.2
300	10.2	42.9	57.0	85.7	128.6	214.4	357.1
325	9.3	41.4	55.0	82.6	124.0	206.6	344.3
350	8.4	40.3	53.6	80.4	120.7	201.1	335.3
375	7.4	38.9	51.6	77.6	116.5	194.1	323.2
400	6.5	36.5	48.9	73.3	109.8	183.1	304.9
425	5.5	35.2	46.5	70.0	105.1	175.1	291.6
450	4.6	33.7	45.1	67.7	101.4	169.0	281.8
475	3.7	31.7	42.3	63.4	95.1	158.2	263.9
500	2.8	28.2	37.6	56.5	84.7	140.9	235.0
538	1.4	16.5	22.1	33.1	49.6	82.7	137.9
550	...	13.9	18.6	27.9	41.8	69.7	116.2
575	...	9.4	12.6	18.9	28.3	47.2	78.6
600	...	6.6	8.9	13.3	19.9	33.2	55.3
625	...	5.1	6.8	10.3	15.4	25.7	42.8
650	...	4.7	6.3	9.5	14.2	23.6	39.4

NOTE: (1) Use annealed material only.

Table 2-3.5C Pressure–Temperature Ratings for Group 3.5 Materials

Nominal Designation	Forgings	Castings	Plates
72Ni–15Cr–8Fe	B564 Gr. N06600 (1)	...	B168 Gr. N06600 (1)

	Working Pressures by Classes, psig						
	Class						
Temp., °F	150	300	400	600	900	1500	2500
−20 to 100	290	750	1,000	1,500	2,250	3,750	6,250
200	260	750	1,000	1,500	2,250	3,750	6,250
300	230	730	970	1,455	2,185	3,640	6,070
400	200	705	940	1,410	2,115	3,530	5,880
500	170	665	885	1,330	1,995	3,325	5,540
600	140	605	805	1,210	1,815	3,025	5,040
650	125	590	785	1,175	1,765	2,940	4,905
700	110	570	755	1,135	1,705	2,840	4,730
750	95	530	710	1,065	1,595	2,660	4,430
800	80	510	675	1,015	1,525	2,540	4,230
850	65	485	650	975	1,460	2,435	4,060
900	50	450	600	900	1,350	2,245	3,745
950	35	365	485	725	1,090	1,815	3,030
1,000	20	240	320	480	720	1,200	2,000
1,050	...	155	205	310	465	770	1,285
1,100	...	105	135	205	310	515	855
1,150	...	75	100	150	225	375	630
1,200	...	70	90	135	205	345	570

NOTE: (1) Use annealed material only.

Table 2-3.6 Pressure–Temperature Ratings for Group 3.6 Materials (20)

Nominal Designation	Forgings	Castings	Plates
33Ni–42Fe–21Cr	A182 Gr. N08020 (1)	...	A240 Gr. N08020 (1)
33Ni–42Fe–21Cr	B564 Gr. N08800 (1)	...	B409 Gr. N08800 (1)

	Working Pressures by Classes, bar						
	Class						
Temp., °C	150	300	400	600	900	1500	2500
−29 to 38	19.0	49.6	66.2	99.3	148.9	248.2	413.7
50	18.7	48.8	65.1	97.6	146.4	244.0	406.7
100	17.5	45.6	60.8	91.2	136.9	228.1	380.1
150	15.8	44.0	58.7	88.0	132.0	219.9	366.6
200	13.8	42.8	57.1	85.6	128.4	214.0	356.7
250	12.1	41.7	55.7	83.5	125.2	208.7	347.9
300	10.2	40.8	54.4	81.6	122.5	204.1	340.2
325	9.3	40.3	53.8	80.6	120.9	201.6	336.0
350	8.4	39.8	53.0	79.5	119.3	198.8	331.3
375	7.4	38.9	51.6	77.6	116.5	194.1	323.2
400	6.5	36.5	48.9	73.3	109.8	183.1	304.9
425	5.5	35.2	46.5	70.0	105.1	175.1	291.6
450	4.6	33.7	45.1	67.7	101.4	169.0	281.8
475	3.7	31.7	42.3	63.4	95.1	158.2	263.9
500	2.8	28.2	37.6	56.5	84.7	140.9	235.0
538	1.4	25.2	33.4	50.0	75.2	125.5	208.9
550	...	25.0	33.3	49.8	74.8	124.9	208.0
575	...	24.0	31.9	47.9	71.8	119.7	199.5
600	...	21.6	28.6	42.9	64.2	107.0	178.5
625	...	18.3	24.3	36.6	54.9	91.2	152.0
650	...	14.1	18.9	28.1	42.5	70.7	117.7
675	...	10.3	13.7	20.5	30.8	51.3	85.6
700	...	5.6	7.4	11.1	16.7	27.8	46.3
725	...	4.0	5.4	8.1	12.1	20.1	33.6
750	...	3.0	4.0	6.1	9.1	15.1	25.2
775	...	2.5	3.3	4.9	7.4	12.4	20.6
800	...	2.2	2.9	4.3	6.5	10.8	18.0
816	...	1.9	2.5	3.8	5.7	9.5	15.8

NOTE: (1) Use annealed material only.

(20) **Table 2-3.6C Pressure–Temperature Ratings for Group 3.6 Materials**

Nominal Designation	Forgings	Castings	Plates
33Ni–42Fe–21Cr	A182 Gr. N08810 (1)	...	A240 Gr. N08810 (1)
33Ni–42Fe–21Cr	B564 Gr. N08800 (1)	...	B409 Gr. N08800 (1)

	Working Pressures by Classes, psig						
	Class						
Temp., °F	150	300	400	600	900	1500	2500
−20 to 100	275	720	960	1,440	2,160	3,600	6,000
200	255	665	885	1,330	1,995	3,325	5,540
300	230	640	850	1,275	1,915	3,190	5,320
400	200	620	825	1,240	1,860	3,095	5,160
500	170	600	805	1,205	1,805	3,010	5,020
600	140	590	785	1,175	1,765	2,940	4,900
650	125	580	770	1,155	1,735	2,890	4,820
700	110	570	755	1,135	1,705	2,840	4,730
750	95	530	710	1,065	1,595	2,660	4,430
800	80	510	675	1,015	1,525	2,540	4,230
850	65	485	650	975	1,460	2,435	4,060
900	50	450	600	900	1,350	2,245	3,745
950	35	385	515	775	1,160	1,930	3,220
1,000	20	365	485	725	1,090	1,820	3,030
1,050	...	360	480	720	1,080	1,800	3,000
1,100	...	325	430	645	965	1,610	2,685
1,150	...	275	365	550	825	1,370	2,285
1,200	...	205	275	410	620	1,030	1,715
1,250	...	145	190	290	430	720	1,200
1,300	...	70	90	135	205	345	570
1,350	...	55	75	110	165	275	455
1,400	...	40	50	75	115	190	315
1,450	...	35	45	70	105	170	285
1,500	...	25	35	55	80	135	230

NOTE: (1) Use annealed material only.

Table 2-3.7 Pressure–Temperature Ratings for Group 3.7 Materials

Nominal Designation	Forgings	Castings	Plates
65Ni–28Mo–2Fe	B462 Gr. N10665 (1)	...	B333 Gr. N10665 (1)
64Ni-29.5Mo–2Cr–2Fe–Mn–W	B462 Gr. N10675 (1)	...	B333 Gr. N10675 (1)

	Working Pressures by Classes, bar						
	Class						
Temp., °C	150	300	400	600	900	1500	2500
−29 to 38	20.0	51.7	68.9	103.4	155.1	258.6	430.9
50	19.5	51.7	68.9	103.4	155.1	258.6	430.9
100	17.7	51.5	68.7	103.0	154.6	257.6	429.4
150	15.8	50.3	66.8	100.3	150.6	250.8	418.2
200	13.8	48.6	64.8	97.2	145.8	243.4	405.4
250	12.1	46.3	61.7	92.7	139.0	231.8	386.2
300	10.2	42.9	57.0	85.7	128.6	214.4	357.1
325	9.3	41.4	55.0	82.6	124.0	206.6	344.3
350	8.4	40.3	53.6	80.4	120.7	201.1	335.3
375	7.4	38.9	51.6	77.6	116.5	194.1	323.2
400	6.5	36.5	48.9	73.3	109.8	183.1	304.9
425	5.5	35.2	46.5	70.0	105.1	175.1	291.6

NOTE: (1) Use solution annealed material only.

Table 2-3.7C Pressure–Temperature Ratings for Group 3.7 Materials

Nominal Designation	Forgings	Castings	Plates
65Ni–28Mo–2Fe	B462 Gr. N10665 (1)	...	B333 Gr. N10665 (1)
64Ni–29.5Mo–2Cr–2Fe–Mn–W	B462 Gr. N10675 (1)	...	B333 Gr. N10675 (1)

	Working Pressures by Classes, psig						
	Class						
Temp., °F	150	300	400	600	900	1500	2500
−20 to 100	290	750	1,000	1,500	2,250	3,750	6,250
200	260	750	1,000	1,500	2,250	3,750	6,250
300	230	730	970	1,455	2,185	3,640	6,070
400	200	705	940	1,410	2,115	3,530	5,880
500	170	665	885	1,330	1,995	3,325	5,540
600	140	605	805	1,210	1,815	3,025	5,040
650	125	590	785	1,175	1,765	2,940	4,905
700	110	570	755	1,135	1,705	2,840	4,730
750	95	530	710	1,065	1,595	2,660	4,430
800	80	510	675	1,015	1,525	2,540	4,230

NOTE: (1) Use solution annealed material only.

Table 2-3.8 Pressure–Temperature Ratings for Group 3.8 Materials

Nominal Designation	Forgings	Castings	Plates
54Ni–16Mo–15Cr	B462 Gr. N10276 (1), (2)	...	B575 Gr. N10276 (1), (2)
60Ni–22Cr–9Mo–3.5Cb	B564 Gr. N06625 (3)–(5)	...	B443 Gr. N06625 (3)–(5)
62Ni–28Mo–5Fe	...	...	B333 Gr. N10001 (1), (6)
70Ni–16Mo–7Cr–5Fe	...	...	B434 Gr. N10003 (3)
61Ni–16Mo–16Cr	...	...	B575 Gr. N06455 (1), (6)
42Ni–21.5Cr–3Mo–2.3Cu	B564 Gr. N08825 (3), (7)	...	B424 Gr. N08825 (3), (7)
55Ni–21Cr–13.5Mo	B462 Gr. N06022 (1), (2), (8)	...	B575 Gr. N06022 (1), (2), (8)
55Ni–23Cr–16Mo–1.6Cu	B462 Gr. N06200 (1), (6)	...	B575 Gr. N06200 (1), (6)

	Working Pressures by Classes, bar						
	Class						
Temp., °C	150	300	400	600	900	1500	2500
−29 to 38	20.0	51.7	68.9	103.4	155.1	258.6	430.9
50	19.5	51.7	68.9	103.4	155.1	258.6	430.9
100	17.7	51.5	68.7	103.0	154.6	257.6	429.4
150	15.8	50.3	66.8	100.3	150.6	250.8	418.2
200	13.8	48.3	64.5	96.7	145.0	241.7	402.8
250	12.1	46.3	61.7	92.7	139.0	231.8	386.2
300	10.2	42.9	57.0	85.7	128.6	214.4	357.1
325	9.3	41.4	55.0	82.6	124.0	206.6	344.3
350	8.4	40.3	53.6	80.4	120.7	201.1	335.3
375	7.4	38.9	51.6	77.6	116.5	194.1	323.2
400	6.5	36.5	48.9	73.3	109.8	183.1	304.9
425	5.5	35.2	46.5	70.0	105.1	175.1	291.6
450	4.6	33.7	45.1	67.7	101.4	169.0	281.8
475	3.7	31.7	42.3	63.4	95.1	158.2	263.9
500	2.8	28.2	37.6	56.5	84.7	140.9	235.0
538	1.4	25.2	33.4	50.0	75.2	125.5	208.9
550	...	25.0	33.3	49.8	74.8	124.9	208.0
575	...	24.0	31.9	47.9	71.8	119.7	199.5
600	...	21.6	28.6	42.9	64.2	107.0	178.5
625	...	18.3	24.3	36.6	54.9	91.2	152.0
650	...	14.1	18.8	28.1	42.2	70.4	117.3
675	...	11.5	15.4	23.0	34.6	57.6	96.0
700	...	8.8	11.7	17.5	26.3	43.8	73.0

NOTES:
(1) Use solution annealed material only.
(2) Not to be used over 675°C.
(3) Use annealed material only.
(4) Not to be used over 645°C. Alloy N06625 in the annealed condition is subject to severe loss of impact strength at room temperatures after exposure in the range of 538°C to 760°C.
(5) Grade 1.
(6) Not to be used over 425°C.
(7) Not to be used over 538°C.
(8) Alloy N06022 in the solution annealed condition is subject to severe loss of impact strength at room temperature after exposure to temperatures in the range of 538°C to 675°C.

Table 2-3.8C Pressure–Temperature Ratings for Group 3.8 Materials

Nominal Designation	Forgings	Castings	Plates
54Ni–16Mo–15Cr	B462 Gr. N10276 (1), (2)	...	B575 Gr. N10276 (1), (2)
60Ni–22Cr–9Mo–3.5Cb	B564 Gr. N06625 (3)–(5)	...	B443 Gr. N06625 (3)–(5)
62Ni–28Mo–5Fe	...	...	B333 Gr. N10001 (1), (6)
70Ni–16Mo–7Cr–5Fe	...	...	B434 Gr. N10003 (3)
61Ni–16Mo–16Cr	...	...	B575 Gr. N06455 (1), (6)
42Ni–21.5Cr–3Mo–2.3Cu	B564 Gr. N08825 (3), (7)	...	B424 Gr. N08825 (3), (7)
55Ni–21Cr–13.5Mo	B462 Gr. N06022 (1), (2), (8)	...	B575 Gr. N06022 (1), (2), (8)
55Ni–23Cr–16Mo–1.6Cu	B462 Gr. N06200 (1), (6)	...	B575 Gr. N06200 (1), (6)

	Working Pressures by Classes, psig						
	Class						
Temp., °F	150	300	400	600	900	1500	2500
−20 to 100	290	750	1,000	1,500	2,250	3,750	6,250
200	260	750	1,000	1,500	2,250	3,750	6,250
300	230	730	970	1,455	2,185	3,640	6,070
400	200	700	930	1,395	2,095	3,490	5,820
500	170	665	885	1,330	1,995	3,325	5,540
600	140	605	805	1,210	1,815	3,025	5,040
650	125	590	785	1,175	1,765	2,940	4,905
700	110	570	755	1,135	1,705	2,840	4,730
750	95	530	710	1,065	1,595	2,660	4,430
800	80	510	675	1,015	1,525	2,540	4,230
850	65	485	650	975	1,460	2,435	4,060
900	50	450	600	900	1,350	2,245	3,745
950	35	385	515	775	1,160	1,930	3,220
1,000	20	365	485	725	1,090	1,820	3,030
1,050	...	360	480	720	1,080	1,800	3,000
1,100	...	325	430	645	965	1,610	2,685
1,150	...	275	365	550	825	1,370	2,285
1,200	...	205	275	410	615	1,030	1,715
1,250	...	165	220	330	495	825	1,370
1,300	...	120	160	240	360	600	1,000

NOTES:
(1) Use solution annealed material only.
(2) Not to be used over 1,250°F.
(3) Use annealed material only.
(4) Not to be used over 1,200°F. Alloy N06625 in the annealed condition is subject to severe loss of impact strength at room temperatures after exposure in the range of 1,000°F to 1,400°F.
(5) Grade 1.
(6) Not to be used over 800°F.
(7) Not to be used over 1,000°F.
(8) Alloy N06022 in the solution annealed condition is subject to severe loss of impact strength at room temperature after exposure to temperatures in the range of 1,000°F to 1,250°F.

Table 2-3.9 Pressure–Temperature Ratings for Group 3.9 Materials

Nominal Designation	Forgings	Castings	Plates
47Ni–22Cr–9Mo–18Fe	B572 Gr. N06002 (1), (2)	...	B435 Gr. N06002 (1)
21Ni–30Fe–22Cr–18Co–3Mo–3W	B572 Gr. R30556 (1), (2)	...	B435 Gr. R30556 (1)

	Working Pressures by Classes, bar						
	Class						
Temp., °C	150	300	400	600	900	1500	2500
−29 to 38	20.0	51.7	68.9	103.4	155.1	258.6	430.9
50	19.5	51.7	68.9	103.4	155.1	258.6	430.9
100	17.7	51.5	68.7	103.0	154.6	257.6	429.4
150	15.8	47.6	63.4	95.2	142.8	237.9	396.5
200	13.8	44.3	59.1	88.6	132.9	221.5	369.2
250	12.1	41.6	55.4	83.1	124.7	207.9	346.4
300	10.2	39.5	52.7	79.0	118.5	197.4	329.1
325	9.3	38.6	51.5	77.2	115.8	193.0	321.7
350	8.4	37.9	50.5	75.8	113.7	189.5	315.8
375	7.4	37.3	49.8	74.7	112.0	186.6	311.1
400	6.5	36.5	48.9	73.3	109.8	183.1	304.9
425	5.5	35.2	46.5	70.0	105.1	175.1	291.6
450	4.6	33.7	45.1	67.7	101.4	169.0	281.8
475	3.7	31.7	42.3	63.4	95.1	158.2	263.9
500	2.8	28.2	37.6	56.5	84.7	140.9	235.0
538	1.4	25.2	33.4	50.0	75.2	125.5	208.9
550	...	25.0	33.3	49.8	74.8	124.9	208.0
575	...	24.0	31.9	47.9	71.8	119.7	199.5
600	...	21.6	28.6	42.9	64.2	107.0	178.5
625	...	18.3	24.3	36.6	54.9	91.2	152.0
650	...	14.1	18.9	28.1	42.5	70.7	117.7
675	...	12.4	16.9	25.2	37.6	62.7	104.5
700	...	10.1	13.4	20.0	29.8	49.7	83.0
725	...	7.9	10.5	15.4	23.2	38.6	64.4
750	...	5.9	7.9	11.7	17.6	29.6	49.1
775	...	4.6	6.2	9.0	13.7	22.8	38.0
800	...	3.5	4.8	7.0	10.5	17.4	29.2
816	...	2.8	3.8	5.9	8.6	14.1	23.8

NOTES:
(1) Use solution annealed material only.
(2) The chemical composition, mechanical properties, heat treating requirements, and grain size requirements shall conform to the applicable ASTM specification. The manufacturing procedures, tolerances, tests, certification, and markings shall be in accordance with ASTM B564.

Table 2-3.9C Pressure–Temperature Ratings for Group 3.9 Materials

Nominal Designation	Forgings	Castings	Plates
47Ni–22Cr–9Mo–18Fe	B572 Gr. N06002 (1)	...	B435 Gr. N06002 (1)
21Ni–30Fe–22Cr–18Co–3Mo–3W	B572 Gr. R30556 (1)	...	B435 Gr. R30556 (1)

	Working Pressures by Classes, psig						
	Class						
Temp., °F	150	300	400	600	900	1500	2500
−20 to 100	290	750	1,000	1,500	2,250	3,750	6,250
200	260	750	1,000	1,500	2,250	3,750	6,250
300	230	690	920	1,380	2,075	3,455	5,760
400	200	640	850	1,275	1,915	3,190	5,320
500	170	595	795	1,190	1,785	2,975	4,960
600	140	565	750	1,130	1,690	2,820	4,700
650	125	550	735	1,105	1,655	2,760	4,600
700	110	540	725	1,085	1,625	2,710	4,520
750	95	530	710	1,065	1,595	2,660	4,430
800	80	510	675	1,015	1,525	2,540	4,230
850	65	485	650	975	1,460	2,435	4,060
900	50	450	600	900	1,350	2,245	3,745
950	35	385	515	775	1,160	1,930	3,220
1,000	20	365	485	725	1,090	1,820	3,030
1,050	...	360	480	720	1,080	1,800	3,000
1,100	...	325	430	645	965	1,610	2,685
1,150	...	275	365	550	825	1,370	2,285
1,200	...	205	275	410	620	1,030	1,715
1,250	...	180	245	365	545	910	1,515
1,300	...	140	185	275	410	685	1,145
1,350	...	105	140	205	310	515	860
1,400	...	75	100	150	225	380	630
1,450	...	60	80	115	175	290	485
1,500	...	40	55	85	125	205	345

NOTE:

(1) Use solution annealed material only.

(2) The chemical composition, mechanical properties, heat treating requirements, and grain size requirements shall conform to the applicable ASTM specification. The manufacturing procedures, tolerances, tests, certification, and markings shall be in accordance with ASTM B564.

(20)

Table 2-3.10 Pressure–Temperature Ratings for Group 3.10 Materials

Nominal Designation	Forgings	Castings	Plates
25Ni–47Fe–21Cr–5Mo	...	...	A240 Gr. N08700 (1)
25Ni–47Fe–21Cr–5Mo	...	...	B599 Gr. N08700 (1)

	Working Pressures by Classes, bar						
	Class						
Temp., °C	150	300	400	600	900	1500	2500
−29 to 38	20.0	51.7	68.9	103.4	155.1	258.6	430.9
50	19.5	51.7	68.9	103.4	155.1	258.6	430.9
100	17.7	51.5	68.7	103.0	154.6	257.6	429.4
150	15.8	47.1	62.8	94.2	141.3	235.5	392.5
200	13.8	44.3	59.0	88.5	132.8	221.3	368.9
250	12.1	42.8	57.1	85.6	128.4	214.0	356.6
300	10.2	41.3	55.1	82.7	124.0	206.7	344.5
325	9.3	40.4	53.8	80.7	121.1	201.8	336.4
350	8.4	38.9	51.9	77.8	116.7	194.5	324.2

NOTE: (1) Use solution annealed material only.

(20)

Table 2-3.10C Pressure–Temperature Ratings for Group 3.10 Materials

Nominal Designation	Forgings	Castings	Plates
25Ni–47Fe–21Cr–5Mo	...	...	A240 Gr. N08700 (1)
25Ni–47Fe–21Cr–5Mo	...	...	B599 Gr. N08700 (1)

	Working Pressures by Classes, psig						
	Class						
Temp., °F	150	300	400	600	900	1500	2500
−20 to 100	290	750	1,000	1,500	2,250	3,750	6,250
200	260	750	1,000	1,500	2,250	3,750	6,250
300	230	685	910	1,370	2,050	3,420	5,700
400	200	640	850	1,275	1,915	3,190	5,320
500	170	615	820	1,235	1,850	3,085	5,140
600	140	595	790	1,185	1,780	2,965	4,940
650	125	570	760	1,140	1,715	2,855	4,760

NOTE: (1) Use solution annealed material only.

Table 2-3.11 Pressure–Temperature Ratings for Group 3.11 Materials (20)

Nominal Designation	Forgings	Castings	Plates
44Fe–25Ni–21Cr–Mo	A182 Gr. N08904 (1), (2)	…	A240 Gr. N08904 (1)

	Working Pressures by Classes, bar						
	Class						
Temp., °C	150	300	400	600	900	1500	2500
−29 to 38	19.7	51.3	68.4	102.6	153.9	256.5	427.5
50	18.8	49.1	65.5	98.3	147.4	245.7	409.6
100	15.7	41.1	54.7	82.1	123.2	205.3	342.1
150	14.4	37.5	50.0	75.0	112.5	187.5	312.5
200	13.3	34.7	46.2	69.3	104.0	173.4	288.9
250	12.1	32.0	42.6	64.0	95.9	159.9	266.5
300	10.2	30.0	40.0	60.0	90.0	150.1	250.1
325	9.3	29.2	39.0	58.5	87.7	146.1	243.6
350	8.4	28.7	38.2	57.3	86.0	143.4	238.9
375	7.4	28.2	37.7	56.5	84.7	141.2	235.4

NOTES:
(1) Use annealed material only.
(2) The chemical composition, mechanical properties, heat treating requirements, and grain size requirements shall conform to the applicable ASTM specification. The manufacturing procedures, tolerances, tests, certification, and markings shall be in accordance with ASTM B564.

Table 2-3.11C Pressure–Temperature Ratings for Group 3.11 Materials (20)

Nominal Designation	Forgings	Castings	Plates
44Fe–25Ni–21Cr–Mo	A182 Gr. N08904 (1), (2)	…	A240 Gr. N08904 (1)

	Working Pressures by Classes, psig						
	Class						
Temp., °F	150	300	400	600	900	1500	2500
−20 to 100	285	745	990	1,490	2,230	3,720	6,200
200	230	600	805	1,205	1,805	3,010	5,020
300	210	545	725	1,090	1,635	2,725	4,540
400	190	500	665	1,000	1,500	2,495	4,160
500	170	455	610	910	1,370	2,280	3,800
600	140	425	570	855	1,280	2,135	3,560
650	125	420	555	835	1,255	2,090	3,480
700	110	410	545	820	1,230	2,050	3,420

NOTES:
(1) Use annealed material only.
(2) The chemical composition, mechanical properties, heat treating requirements, and grain size requirements shall conform to the applicable ASTM specification. The manufacturing procedures, tolerances, tests, certification, and markings shall be in accordance with ASTM B564.

(20)

Table 2-3.12 Pressure–Temperature Ratings for Group 3.12 Materials

Nominal Designation	Forgings	Castings	Plates
26Ni–43Fe–22Cr–5Mo	…	…	B620 Gr. N08320 (1)
47Ni–22Cr–20Fe–7Mo	…	…	B582 Gr. N06985 (1)
46Fe–24Ni–21Cr–6Mo–Cu–N	A182 Gr. N08367 (1)	A351 Gr. CN3MN (1)	A240 Gr. N08367 (1)
46Fe–24Ni–21Cr–6Mo–Cu–N	B462 Gr. N08367 (1)	A351 Gr. CN3MN (1)	B688 Gr. N08367 (1)

	Working Pressures by Classes, bar						
	Class						
Temp., °C	150	300	400	600	900	1500	2500
−29 to 38	17.8	46.3	61.8	92.7	139.0	231.7	386.1
50	17.5	45.6	60.8	91.1	136.7	227.8	379.7
100	16.3	42.5	56.7	85.1	127.6	212.7	354.5
150	15.4	40.1	53.5	80.3	120.4	200.7	334.6
200	13.8	37.3	49.8	74.6	112.0	186.6	311.0
250	12.1	34.9	46.5	69.8	104.7	174.5	290.8
300	10.2	33.1	44.1	66.2	99.3	165.5	275.9
325	9.3	32.3	43.1	64.6	97.0	161.6	269.3
350	8.4	31.6	42.1	63.2	94.8	158.1	263.4
375	7.4	31.0	41.4	62.0	93.0	155.1	258.5
400	6.5	30.4	40.6	60.8	91.3	152.1	253.5
425	5.5	29.8	39.8	59.7	89.5	149.1	248.5

NOTE: (1) Use solution annealed material only.

(20)

Table 2-3.12C Pressure–Temperature Ratings for Group 3.12 Materials

Nominal Designation	Forgings	Castings	Plates
26Ni–43Fe–22Cr–5Mo	…	…	B620 Gr. N08320 (1)
47Ni–22Cr–20Fe–7Mo	…	…	B582 Gr. N06985 (1)
46Fe–24Ni–21Cr–6Mo–Cu–N	A182 Gr. N08367 (1)	A351 Gr. CN3MN (1)	A240 Gr. N08367 (1)
46Fe–24Ni–21Cr–6Mo–Cu–N	B462 Gr. N08367 (1)	A351 Gr. CN3MN (1)	B688 Gr. N08367 (1)

	Working Pressures by Classes, psig						
	Class						
Temp., °F	150	300	400	600	900	1500	2500
−20 to 100	260	670	895	1,345	2,015	3,360	5,600
200	240	620	830	1,245	1,865	3,110	5,180
300	225	585	780	1,165	1,750	2,915	4,860
400	200	540	715	1,075	1,615	2,690	4,480
500	170	500	665	1,000	1,500	2,495	4,160
600	140	475	630	945	1,420	2,365	3,940
650	125	460	615	920	1,380	2,305	3,840
700	110	450	600	900	1,355	2,255	3,760
750	95	440	590	885	1,325	2,210	3,680
800	80	430	575	865	1,295	2,160	3,600

NOTE: (1) Use solution annealed material only.

Table 2-3.13 Pressure–Temperature Ratings for Group 3.13 Materials

Nominal Designation	Forgings	Castings	Plates
49Ni–25Cr–18Fe–6Mo	...	...	B582 Gr. N06975 (1)
Ni–Fe–Cr–Mo–Cu–Low C	B564 Gr. N08031 (2)	...	B625 Gr. N08031 (2)

	Working Pressures by Classes, bar						
	Class						
Temp., °C	150	300	400	600	900	1500	2500
−29 to 38	20.0	51.7	68.9	103.4	155.1	258.6	430.9
50	19.5	51.7	68.9	103.4	155.1	258.6	430.9
100	17.7	48.2	64.2	96.3	144.5	240.8	401.4
150	15.8	45.8	61.0	91.6	137.4	228.9	381.6
200	13.8	43.6	58.1	87.1	130.7	217.8	362.9
250	12.1	41.5	55.3	82.9	124.4	207.3	345.5
300	10.2	39.4	52.5	78.7	118.1	196.8	328.1
325	9.3	38.4	51.3	76.9	115.3	192.2	320.3
350	8.4	37.7	50.3	75.5	113.2	188.7	314.5
375	7.4	37.2	49.5	74.3	111.5	185.8	309.7
400	6.5	36.5	48.9	73.3	109.8	183.1	304.9
425	5.5	35.2	46.5	70.0	105.1	175.1	291.6

NOTES:
(1) Use solution annealed material only.
(2) Use annealed material only.

Table 2-3.13C Pressure–Temperature Ratings for Group 3.13 Materials

Nominal Designation	Forgings	Castings	Plates
49Ni–25Cr–18Fe–6Mo	...	...	B582 Gr. N06975 (1)
Ni–Fe–Cr–Mo–Cu–Low C	B564 Gr. N08031 (2)	...	B625 Gr. N08031 (2)

	Working Pressures by Classes, psig						
	Class						
Temp., °F	150	300	400	600	900	1500	2500
−20 to 100	290	750	1,000	1,500	2,250	3,750	6,250
200	260	705	940	1,405	2,110	3,515	5,860
300	230	665	885	1,330	1,995	3,325	5,540
400	200	630	840	1,260	1,885	3,145	5,240
500	170	595	795	1,190	1,785	2,975	4,960
600	140	560	750	1,125	1,685	2,810	4,680
650	125	550	735	1,100	1,650	2,750	4,580
700	110	540	720	1,080	1,620	2,700	4,500
750	95	530	710	1,065	1,595	2,660	4,430
800	80	510	675	1,015	1,525	2,540	4,230

NOTES:
(1) Use solution annealed material only.
(2) Use annealed material only.

Table 2-3.14 Pressure–Temperature Ratings for Group 3.14 Materials

Nominal Designation	Forgings	Castings	Plates
47Ni–22Cr–19Fe–6Mo	…	…	B582 Gr. N06007 (1)
40Ni–29Cr–15Fe–5Mo	B462 Gr. N06030 (1), (2)	…	B582 Gr. N06030 (1), (2)
58Ni–33Cr–8Mo	B462 Gr. N06035 (1), (2)	…	B575 Gr. N06035 (1), (2)

	Working Pressures by Classes, bar						
	Class						
Temp., °C	150	300	400	600	900	1500	2500
−29 to 38	19.0	49.6	66.2	99.3	148.9	248.2	413.7
50	18.6	48.6	64.7	97.1	145.7	242.8	404.6
100	17.0	44.3	59.0	88.6	132.8	221.4	369.0
150	15.8	41.3	55.1	82.6	124.0	206.6	344.3
200	13.8	39.1	52.1	78.2	117.3	195.4	325.7
250	12.1	37.4	49.9	74.8	112.2	187.0	311.6
300	10.2	36.1	48.2	72.2	108.3	180.6	300.9
325	9.3	35.6	47.4	71.1	106.7	177.9	296.4
350	8.4	35.2	46.9	70.3	105.5	175.8	293.1
375	7.4	34.9	46.5	69.7	104.6	174.3	290.6
400	6.5	34.6	46.1	69.2	103.7	172.9	288.1
425	5.5	34.4	45.9	68.9	103.3	172.1	286.9
450	4.6	33.7	45.1	67.7	101.4	169.0	281.8
475	3.7	31.7	42.3	63.4	95.1	158.2	263.9
500	2.8	28.2	37.6	56.5	84.7	140.9	235.0
538	1.4	25.2	33.4	50.0	75.2	125.5	208.9

NOTES:
(1) Use solution annealed material only.
(2) Not to be used over 425°C.

Table 2-3.14C Pressure–Temperature Ratings for Group 3.14 Materials

Nominal Designation	Forgings	Castings	Plates
47Ni–22Cr–19Fe–6Mo	...	...	B582 Gr. N06007 (1)
40Ni–29Cr–15Fe–5Mo	B462 Gr. N06030 (1), (2)	...	B582 Gr. N06030 (1), (2)
58Ni–33Cr–8Mo	B462 Gr. N06035 (1), (2)	...	B575 Gr. N06035 (1), (2)

	Working Pressures by Classes, psig						
	Class						
Temp., °F	150	300	400	600	900	1500	2500
−20 to 100	275	720	960	1,440	2,160	3,600	6,000
200	250	650	865	1,295	1,945	3,240	5,400
300	230	600	800	1,200	1,800	3,000	5,000
400	200	565	750	1,130	1,690	2,820	4,700
500	170	540	715	1,075	1,615	2,690	4,480
600	140	520	690	1,035	1,555	2,590	4,320
650	125	510	680	1,020	1,535	2,555	4,260
700	110	505	675	1,015	1,520	2,530	4,220
750	95	500	670	1,005	1,505	2,510	4,180
800	80	500	665	1,000	1,500	2,495	4,160
850	65	485	650	975	1,460	2,435	4,060
900	50	450	600	900	1,350	2,245	3,745
950	35	385	515	775	1,160	1,930	3,220
1,000	20	365	485	725	1,090	1,820	3,030

NOTES:
(1) Use solution annealed material only.
(2) Not to be used over 800°F.

(20)

Table 2-3.15 Pressure–Temperature Ratings for Group 3.15 Materials

Nominal Designation	Forgings	Castings	Plates
33Ni–42Fe–21Cr	A182 Gr. N08810 (1)	...	A240 Gr. N08810 (1)
33Ni–42Fe–21Cr	B564 Gr. N08810 (1)	...	B409 Gr. N08810 (1)

	Working Pressures by Classes, bar						
	Class						
Temp., °C	150	300	400	600	900	1500	2500
−29 to 38	15.9	41.4	55.2	82.7	124.1	206.8	344.7
50	15.6	40.6	54.2	81.3	121.9	203.2	338.7
100	14.5	37.8	50.4	75.6	113.4	189.0	315.0
150	13.7	35.9	47.8	71.7	107.6	179.3	298.9
200	13.0	33.9	45.2	67.9	101.8	169.6	282.7
250	12.1	32.3	43.0	64.5	96.8	161.3	268.9
300	10.2	30.7	41.0	61.5	92.2	153.7	256.2
325	9.3	30.1	40.1	60.1	90.2	150.3	250.5
350	8.4	29.4	39.2	58.8	88.3	147.1	245.2
375	7.4	28.7	38.3	57.4	86.2	143.6	239.4
400	6.5	28.3	37.7	56.5	84.8	141.3	235.6
425	5.5	27.7	36.9	55.3	83.0	138.4	230.6
450	4.6	27.2	36.3	54.4	81.7	136.1	226.8
475	3.7	26.8	35.7	53.5	80.3	133.9	223.1
500	2.8	26.3	35.1	52.6	79.0	131.6	219.4
538	1.4	25.2	33.4	50.0	75.2	125.5	208.9
550	...	25.0	33.3	49.8	74.8	124.9	208.0
575	...	24.0	31.9	47.9	71.8	119.7	199.5
600	...	21.6	28.6	42.9	64.2	107.0	178.5
625	...	18.3	24.3	36.6	54.9	91.2	152.0
650	...	14.1	18.9	28.1	42.5	70.7	117.7
675	...	12.4	16.9	25.2	37.6	62.7	104.5
700	...	10.1	13.4	20.0	29.8	49.7	83.0
725	...	7.9	10.5	15.4	23.2	38.6	64.4
750	...	5.9	7.9	11.7	17.6	29.6	49.1
775	...	4.6	6.2	9.0	13.7	22.8	38.0
800	...	3.5	4.8	7.0	10.5	17.4	29.2
816	...	2.8	3.8	5.9	8.6	14.1	23.8

NOTE: (1) Use solution annealed material only.

Table 2-3.15C Pressure–Temperature Ratings for Group 3.15 Materials (20)

Nominal Designation	Forgings	Castings	Plates
33Ni–42Fe–21Cr	A182 Gr. N08810 (1)	…	A240 Gr. N08810 (1)
33Ni–42Fe–21Cr	B564 Gr. N08810 (1)	…	B409 Gr. N08810 (1)

	Working Pressures by Classes, psig						
	Class						
Temp., °F	150	300	400	600	900	1500	2500
−20 to 100	230	600	800	1,200	1,800	3,000	5,000
200	210	550	735	1,105	1,655	2,760	4,600
300	200	520	695	1,040	1,560	2,605	4,340
400	190	490	655	980	1,470	2,450	4,080
500	170	465	620	925	1,390	2,315	3,860
600	140	440	585	880	1,320	2,195	3,660
650	125	430	575	860	1,290	2,150	3,580
700	110	420	555	835	1,255	2,090	3,480
750	95	410	545	820	1,230	2,050	3,420
800	80	400	535	800	1,200	2,005	3,340
850	65	395	525	785	1,180	1,970	3,280
900	50	385	515	775	1,160	1,930	3,220
950	35	380	505	760	1,140	1,895	3,160
1,000	20	365	485	725	1,090	1,820	3,030
1,050	…	350	465	700	1,050	1,750	2,915
1,100	…	325	430	645	965	1,610	2,685
1,150	…	275	365	550	825	1,370	2,285
1,200	…	205	275	410	620	1,030	1,715
1,250	…	180	245	365	545	910	1,515
1,300	…	140	185	275	410	685	1,145
1,350	…	105	140	205	310	515	860
1,400	…	75	100	150	225	380	630
1,450	…	60	80	115	175	290	485
1,500	…	40	55	85	125	205	345

NOTE: (1) Use solution annealed material only.

Table 2-3.16 Pressure–Temperature Ratings for Group 3.16 Materials

Nominal Designation	Forgings	Castings	Plates
35Ni–19Cr–1¼Si	B511 Gr. N08330	...	B536 Gr. N08330 (1)

	Working Pressures by Classes, bar						
	Class						
Temp., °C	150	300	400	600	900	1500	2500
−29 to 38	19.0	49.6	66.2	99.3	148.9	248.2	413.7
50	18.5	48.4	64.5	96.7	145.1	241.8	403.1
100	16.7	43.5	58.0	87.0	130.5	217.5	362.4
150	15.6	40.8	54.4	81.6	122.5	204.1	340.2
200	13.8	38.6	51.5	77.2	115.8	192.9	321.6
250	12.1	36.8	49.0	73.5	110.3	183.8	306.3
300	10.2	35.2	47.0	70.4	105.6	176.1	293.4
325	9.3	34.5	46.0	69.0	103.6	172.6	287.7
350	8.4	33.9	45.2	67.8	101.7	169.4	282.4
375	7.4	33.2	44.2	66.3	99.5	165.8	276.4
400	6.5	32.6	43.4	65.1	97.7	162.9	271.4
425	5.5	32.0	42.6	64.0	95.9	159.9	266.5
450	4.6	31.4	41.8	62.8	94.1	156.9	261.5
475	3.7	30.8	41.0	61.6	92.4	153.9	256.5
500	2.8	28.2	37.6	56.5	84.7	140.9	235.0
538	1.4	25.2	33.4	50.0	75.2	125.5	208.9
550	...	25.0	33.3	49.8	74.8	124.9	208.0
575	...	21.9	29.2	43.7	65.6	109.4	182.3
600	...	17.4	23.2	34.8	52.3	87.1	145.1
625	...	13.8	18.3	27.5	41.3	68.8	114.6
650	...	11.0	14.7	22.1	33.1	55.1	91.9
675	...	9.1	12.1	18.2	27.3	45.6	75.9
700	...	7.6	10.1	15.2	22.8	38.0	63.3
725	...	6.1	8.1	12.2	18.3	30.5	50.9
750	...	4.8	6.4	9.5	14.3	23.8	39.7
775	...	3.9	5.2	7.7	11.6	19.4	32.3
800	...	3.1	4.2	6.3	9.4	15.6	26.1
816	...	2.6	3.5	5.2	7.8	13.0	21.7

NOTE: (1) Use solution annealed material only.

Table 2-3.16C Pressure–Temperature Ratings for Group 3.16 Materials

Nominal Designation	Forgings	Castings	Plates
35Ni–19Cr–1¼Si	B511 Gr. N08330	...	B536 Gr. N08330 (1)

	Working Pressures by Classes, psig						
	Class						
Temp., °F	150	300	400	600	900	1500	2500
−20 to 100	275	720	960	1,440	2,160	3,600	6,000
200	245	635	850	1,270	1,910	3,180	5,300
300	225	595	790	1,185	1,780	2,965	4,940
400	200	555	740	1,115	1,670	2,785	4,640
500	170	530	705	1,055	1,585	2,640	4,400
600	140	505	670	1,010	1,510	2,520	4,200
650	125	495	660	990	1,485	2,470	4,120
700	110	480	645	965	1,445	2,410	4,020
750	95	475	630	945	1,420	2,365	3,940
800	80	465	620	925	1,390	2,315	3,860
850	65	455	605	905	1,360	2,270	3,780
900	50	445	590	890	1,330	2,220	3,700
950	35	385	515	775	1,160	1,930	3,220
1,000	20	365	485	725	1,090	1,820	3,030
1,050	...	345	455	685	1,030	1,715	2,855
1,100	...	265	355	535	800	1,335	2,230
1,150	...	205	275	410	615	1,030	1,715
1,200	...	160	215	320	485	805	1,345
1,250	...	130	175	260	390	650	1,085
1,300	...	105	140	215	320	530	885
1,350	...	80	110	165	245	410	685
1,400	...	60	80	125	185	310	515
1,450	...	50	70	105	155	255	430
1,500	...	40	50	75	115	190	315

NOTE:
(1) Use solution annealed material only.

Table 2-3.17 Pressure–Temperature Ratings for Group 3.17 Materials

Nominal Designation	Forgings	Castings	Plates
29Ni–20.5Cr–3.5Cu–2.5Mo	...	A351 Gr. CN7M (1)	...

	Working Pressures by Classes, bar						
	Class						
Temp., °C	150	300	400	600	900	1500	2500
−29 to 38	15.9	41.4	55.2	82.7	124.1	206.8	344.7
50	15.4	40.1	53.5	80.3	120.4	200.7	334.4
100	13.5	35.3	47.1	70.6	105.9	176.5	294.2
150	12.3	32.0	42.7	64.1	96.1	160.2	267.0
200	11.3	29.4	39.1	58.7	88.1	146.8	244.7
250	10.4	27.2	36.3	54.4	81.7	136.1	226.9
300	9.7	25.4	33.8	50.8	76.1	126.9	211.5
325	9.3	24.4	32.6	48.8	73.3	122.1	203.5

NOTE: (1) Use solution annealed material only.

Table 2-3.17C Pressure–Temperature Ratings for Group 3.17 Materials

Nominal Designation	Forgings	Castings	Plates
29Ni–20.5Cr–3.5Cu–2.5Mo	...	A351 Gr. CN7M (1)	...

	Working Pressures by Classes, psig						
	Class						
Temp., °F	150	300	400	600	900	1500	2500
−20 to 100	230	600	800	1,200	1,800	3,000	5,000
200	200	520	690	1,035	1,555	2,590	4,320
300	180	465	620	930	1,395	2,330	3,880
400	160	420	565	845	1,265	2,110	3,520
500	150	390	520	780	1,165	1,945	3,240
600	140	360	480	720	1,080	1,800	3,000

NOTE: (1) Use solution annealed material only.

Table 2-3.19 Pressure–Temperature Ratings for Group 3.19 Materials

Nominal Designation	Forgings	Castings	Plates
57Ni–22Cr–14W–2Mo–La	B564 Gr. N06230	...	B435 Gr. N06230

	Working Pressures by Classes, bar						
	Class						
Temp., °C	150	300	400	600	900	1500	2500
−29 to 38	20.0	51.7	68.9	103.4	155.1	258.6	430.9
50	19.5	51.7	68.9	103.4	155.1	258.6	430.9
100	17.7	51.5	68.7	103.0	154.6	257.6	429.4
150	15.8	50.3	66.8	100.3	150.6	250.8	418.2
200	13.8	48.6	64.8	97.2	145.8	243.4	405.4
250	12.1	46.3	61.7	92.7	139.0	231.8	386.2
300	10.2	42.9	57.0	85.7	128.6	214.4	357.1
325	9.3	41.4	55.0	82.6	124.0	206.6	344.3
350	8.4	40.3	53.6	80.4	120.7	201.1	335.3
375	7.4	38.9	51.6	77.6	116.5	194.1	323.2
400	6.5	36.5	48.9	73.3	109.8	183.1	304.9
425	5.5	35.2	46.5	70.0	105.1	175.1	291.6
450	4.6	33.7	45.1	67.7	101.4	169.0	281.8
475	3.7	31.7	42.3	63.4	95.1	158.2	263.9
500	2.8	28.2	37.6	56.5	84.7	140.9	235.0
538	1.4	25.2	33.4	50.0	75.2	125.5	208.9
550	1.4	25.0	33.3	49.8	74.8	124.9	208.0
575	1.4	24.0	31.9	47.9	71.8	119.7	199.5
600	1.4	21.6	28.6	42.9	64.2	107.0	178.5
625	1.4	18.3	24.3	36.6	54.9	91.2	152.0
650	1.4	14.1	18.9	28.1	42.5	70.7	117.7
675	1.4	12.4	16.9	25.2	37.6	62.7	104.5
700	1.4	10.1	13.4	20.0	29.8	49.7	83.0
725	1.4	7.9	10.5	15.4	23.2	38.6	64.4
750	1.4	5.9	7.9	11.5	17.6	29.6	49.1
775	1.4	4.6	6.2	9.0	13.7	22.8	38.0
800	1.4	3.5	4.8	7.0	10.5	17.4	29.2
816	1.4	2.8	3.8	5.9	8.6	14.1	23.8

Table 2-3.19C Pressure–Temperature Ratings for Group 3.19 Materials

Nominal Designation	Forgings	Castings	Plates
57Ni–22Cr–14W–2Mo–La	B564 Gr. N06230	…	B435 Gr. N06230

	Working Pressures by Classes, psig						
	Class						
Temp., °F	150	300	400	600	900	1500	2500
−20 to 100	290	750	1,000	1,500	2,250	3,750	6,250
200	260	750	1,000	1,500	2,250	3,750	6,250
300	230	730	970	1,455	2,185	3,640	6,070
400	200	705	940	1,410	2,115	3,530	5,880
500	170	665	885	1,330	1,995	3,325	5,540
600	140	605	805	1,210	1,815	3,025	5,040
650	125	590	785	1,175	1,765	2,940	4,905
700	110	570	755	1,135	1,705	2,840	4,730
750	95	530	710	1,065	1,595	2,660	4,430
800	80	510	675	1,015	1,525	2,540	4,230
850	65	485	650	975	1,460	2,435	4,060
900	50	450	600	900	1,350	2,245	3,745
950	35	385	515	775	1,160	1,930	3,220
1,000	20	365	485	725	1,090	1,820	3,030
1,050	20	360	480	720	1,080	1,800	3,000
1,100	20	325	430	645	965	1,610	2,685
1,150	20	275	365	550	825	1,370	2,285
1,200	20	205	275	410	620	1,030	1,715
1,250	20	180	245	365	545	910	1,515
1,300	20	140	185	275	410	685	1,145
1,350	20	105	140	205	310	515	860
1,400	20	75	100	150	225	380	630
1,450	20	60	80	115	175	290	485
1,500	20	40	55	85	125	205	345

Table 3 Permissible Imperfections in Flange Facing Finish for Raised Face and Large Male and Female Flanges (20)

NPS	Maximum Radial Projection of Imperfections That Are No Deeper Than the Bottom of the Serrations, mm	Maximum Radial Projection of Imperfections That Are Deeper Than the Bottom of the Serrations, mm	Maximum Depth of Imperfections That Are Deeper Than the Bottom of the Serrations, mm
$\frac{1}{2}$	3.0	1.5	1.5
$\frac{3}{4}$	3.0	1.5	1.5
1	3.0	1.5	1.5
$1\frac{1}{4}$	3.0	1.5	1.5
$1\frac{1}{2}$	3.0	1.5	1.5
2	3.0	1.5	1.5
$2\frac{1}{2}$	3.0	1.5	1.5
3	4.6	1.5	1.5
$3\frac{1}{2}$	6.4	3.0	3.0
4	6.4	3.0	3.0
5	6.4	3.0	3.0
6	6.4	3.0	3.0
8	7.9	4.6	4.6
10	7.9	4.6	4.6
12	7.9	4.6	4.6
14	7.9	4.6	4.6
16	9.6	4.6	4.6
18	12.7	6.4	6.4
20	12.7	6.4	6.4
22	12.7	6.4	6.4
24	12.7	6.4	6.4

(20) **Table 3C Permissible Imperfections in Flange Facing Finish for Raised Face and Large Male and Female Flanges**

NPS	Maximum Radial Projection of Imperfections That Are No Deeper Than the Bottom of the Serrations, in.	Maximum Radial Projection of Imperfections That Are Deeper Than the Bottom of the Serrations, in.	Maximum Depth of Imperfections That Are Deeper Than the Bottom of the Serrations, in.
½	0.12	0.06	0.06
¾	0.12	0.06	0.06
1	0.12	0.06	0.06
1¼	0.12	0.06	0.06
1½	0.12	0.06	0.06
2	0.12	0.06	0.06
2½	0.12	0.06	0.06
3	0.18	0.06	0.06
3½	0.25	0.12	0.12
4	0.25	0.12	0.12
5	0.25	0.12	0.12
6	0.25	0.12	0.12
8	0.31	0.18	0.18
10	0.31	0.18	0.18
12	0.31	0.18	0.18
14	0.31	0.18	0.18
16	0.38	0.18	0.18
18	0.50	0.25	0.25
20	0.50	0.25	0.25
22	0.50	0.25	0.25
24	0.50	0.25	0.25

Table 4 Dimensions of Facings (Other Than Ring Joints, All Pressure Rating Classes) (20)

1	2	3	4	5	6	7	8	9	10	11	12	13	14	15
	Outside Diameter					**Outside Diameter**				**Height**			**Minimum Outside Diameter of Raised Portion (6), (7)**	
Nominal Pipe Size	**Raised Face Large Male and Large Tongue, *R***	**Small Male, *S* (1)**	**Small Tongue, *T***	**Inside Diameter of Large and Small Tongue, *U***	**Inside Diameter of Small Tongue (1)**	**Large Female and Large Groove, *W***	**Small Female, *X* (1)**	**Small Groove, *Y***	**Inside Diameter of Large and Small Groove, *Z***	**Raised Face (2), (3)**	**Large and Small Male and Tongue (2), (4)**	**Depth of Groove or Female (2), (5)**	**Small Female and Groove, *K***	**Large Female and Groove, *L***
½	35.1	18.3	35.1	25.4	...	36.6	19.8	36.6	23.9	...	...	...	44	46
¾	42.9	23.9	42.9	33.3	...	44.4	25.4	44.4	31.8	...	...	...	52	54
1	50.8	30.2	47.8	38.1	...	52.3	31.8	49.3	36.6	...	...	...	57	62
1¼	63.5	38.1	57.2	47.8	...	65.1	39.6	58.7	46.0	...	...	...	67	75
1½	73.0	44.4	63.5	53.8	...	74.7	46.0	65.0	52.3	...	...	...	73	84
2	91.9	57.2	82.6	73.2	...	93.7	58.7	84.1	71.4	...	...	...	92	103
2½	104.6	68.3	95.2	85.9	...	106.4	69.8	96.8	84.1	...	...	...	105	116
3	127.0	84.1	117.3	108.0	...	128.5	85.9	119.1	106.4	...	...	...	127	138
3½	139.7	96.8	130.0	120.6	...	141.2	98.6	131.8	119.1	...	...	...	140	151
4	157.2	109.5	144.5	131.8	...	158.8	111.3	146.0	130.0	...	...	...	157	168
5	185.7	136.7	173.0	160.3	...	187.5	138.2	174.8	158.8	...	...	...	186	197
6	215.9	162.1	203.2	190.5	...	217.4	163.6	204.7	189.0	...	...	...	216	227
8	269.7	212.9	254.0	238.3	...	271.5	214.4	255.5	236.5	...	...	...	270	281
10	323.8	266.7	304.8	285.8	...	325.4	268.2	306.3	284.2	...	...	...	324	335
12	381.0	317.5	362.0	342.9	...	382.5	319.0	363.5	341.4				381	392
14	412.8	349.2	393.7	374.6	...	414.3	350.8	395.2	373.1	...	...	...	413	424
16	469.9	400.0	447.5	425.4	...	471.4	401.6	449.3	423.9	...	...	...	470	481
18	533.4	450.8	512.0	489.0	...	534.9	452.4	512.8	487.4	...	...	...	533	545
20	584.2	501.6	558.8	533.4	...	585.7	503.2	560.3	531.9	...	...	...	584	595
22	641.4	...	...	...	...	...	...	...	...	...	...	...	...	...
24	692.2	603.2	666.8	641.4	...	693.7	604.8	668.3	639.8	...	...	...	692	703

GENERAL NOTES:
(a) Dimensions are in millimeters.
(b) For facing requirements for flanges and flanged fittings, see paras. 6.3 and 6.4 and Figure 6.
(c) For facing requirements for lapped joints, see para. 6.4.3 and Figure 6.
(d) For facing tolerances, see para. 7.3.

Table 4 Dimensions of Facings (Other Than Ring Joints, All Pressure Rating Classes) (Cont'd)

NOTES:

(1) For small male and female joints, care should be taken in the use of these dimensions to ensure that the inside diameter of the fitting or pipe is small enough to permit sufficient bearing surface to prevent the crushing of the gasket. This applies particularly on lines where the joint is made on the end of the pipe. The inside diameter of the fitting should match the inside diameter of the pipe as specified by the purchaser. Threaded companion flanges for small male and female joints are furnished with plain face and are threaded with American National Standard Locknut Thread (NPSL).

(2) See para. 6.4.3 and Figure 6 for thickness and outside diameters of laps.

(3) The height of the raised face is either 1.5 mm or 6.4 mm (see para. 6.4.1).

(4) The height of the large and small male and tongue is 6.4 mm.

(5) The depth of the groove or female is 4.8 mm.

(6) The raised portion of the full face may be furnished unless otherwise specified on order.

(7) Large male and female faces and large tongue and groove are not applicable to Class 150 because of potential dimensional conflicts.

Table 4C Dimensions of Facings (Other Than Ring Joints, All Pressure Rating Classes)

1	2	3	4	5	6	7	8	9	10	11	12	13	14	15
	Outside Diameter					Outside Diameter				Height			Minimum Outside Diameter of Raised Portion (6), (7)	
Nominal Pipe Size	Raised Face Large Male and Large Tongue, *R*	Small Male, *S* (1)	Small Tongue, *T*	Inside Diameter of Large and Small Tongue, *U*	Inside Diameter of Small Male (1)	Large Female and Large Groove, *W*	Small Female, *X* (1)	Small Groove, *Y*	Inside Diameter of Large and Small Groove, *Z*	Raised Face (2), (3)	Large and Small Male and Tongue (2), (4)	Depth of Groove or Female (2), (5)	Small Female and Groove, *K*	Large Female and Groove, *L*
1/2	1.38	0.72	1.38	1.00	...	1.44	0.78	1.44	0.94	...	...	...	1.75	1.81
3/4	1.69	0.94	1.69	1.31	...	1.75	1.00	1.75	1.25	...	...	...	2.06	2.12
1	2.00	1.19	1.88	1.50	...	2.06	1.25	1.94	1.44	...	...	...	2.25	2.44
1 1/4	2.50	1.50	2.25	1.88	...	2.56	1.56	2.31	1.81	...	...	...	2.62	2.94
1 1/2	2.88	1.75	2.50	2.12	...	2.94	1.81	2.56	2.06	...	...	...	2.88	3.31
2	3.62	2.25	3.25	2.88	...	3.69	2.31	3.31	2.81	...	...	...	3.62	4.06
2 1/2	4.12	2.69	3.75	3.38	...	4.19	2.75	3.81	3.31	...	...	...	4.12	4.56
3	5.00	3.31	4.62	4.25	...	5.06	3.38	4.69	4.19	...	...	...	5.00	5.44
3 1/2	5.50	3.81	5.12	4.75	...	5.56	3.88	5.19	4.69	...	...	...	5.50	5.94
4	6.19	4.31	5.69	5.19	...	6.25	4.38	5.75	5.12	...	...	...	6.19	6.62
5	7.31	5.38	6.81	6.31	...	7.38	5.44	6.88	6.25	...	...	...	7.31	7.75
6	8.50	6.38	8.00	7.50	...	8.56	6.44	8.06	7.44	...	...	...	8.50	8.94
8	10.62	8.38	10.00	9.38	...	10.69	8.44	10.06	9.31	...	...	...	10.62	11.06
10	12.75	10.50	12.00	11.25	...	12.81	10.56	12.06	11.19	...	...	...	12.75	13.19
12	15.00	12.50	14.25	13.50	...	15.06	12.56	14.31	13.44	...	...	...	15.00	15.44
14	16.25	13.75	15.50	14.75	...	16.31	13.81	15.56	14.69	...	...	...	16.25	16.69
16	18.50	15.75	17.62	16.75	...	18.56	15.81	17.69	16.69	...	...	...	18.50	18.94
18	21.00	17.75	20.12	19.25	...	21.06	17.81	20.19	19.19	...	...	...	21.00	21.44
20	23.00	19.75	22.00	21.00	...	23.06	19.81	22.06	20.94	...	...	...	23.00	23.44
22	25.25	...	...	...	...	...	...	...	...	...	...	...	...	...
24	27.25	23.75	26.25	25.25	...	27.31	23.81	26.31	25.19	...	...	...	27.25	27.69

GENERAL NOTES:

(a) Dimensions are in inches.

(b) For facing requirements for flanges and flanged fittings, see paras. 6.3 and 6.4 and Figure 6.

(c) For facing requirements for lapped Joints, see para. 6.4.3 and Figure 6.

(d) For facing tolerances, see para. 7.3.

Table 4C Dimensions of Facings (Other Than Ring Joints, All Pressure Rating Classes) (Cont'd)

NOTES:

(1) For small male and female joints, care should be taken in the use of these dimensions to ensure that the inside diameter of fitting or pipe is small enough to permit sufficient bearing surface to prevent the crushing of the gasket. This applies particularly where the joint is made on the end of the pipe. The inside diameter of the fitting should match the inside diameter of the pipe as specified by the purchaser. Threaded companion flanges for small male and female joints are furnished with plain face and are threaded with American National Standard Locknut Thread (NPSL).

(2) See para. 6.4.3 and Figure 6 for thickness and outside diameters of laps.

(3) The height of the raised face is either 0.06 in. or 0.25 in. (see para. 6.4.1).

(4) The height of the large and small male and tongue is 0.25 in.

(5) The depth of the groove or female is 0.19 in.

(6) The raised portion of the full face may be furnished unless otherwise specified on order.

(7) Large male and female faces and large tongue and groove are not applicable to Class 150 because of potential dimensional conflicts.

TABLE STARTS ON NEXT PAGE

(20) **Table 5 Dimensions of Ring Joint Facings (All Pressure Rating Classes)**

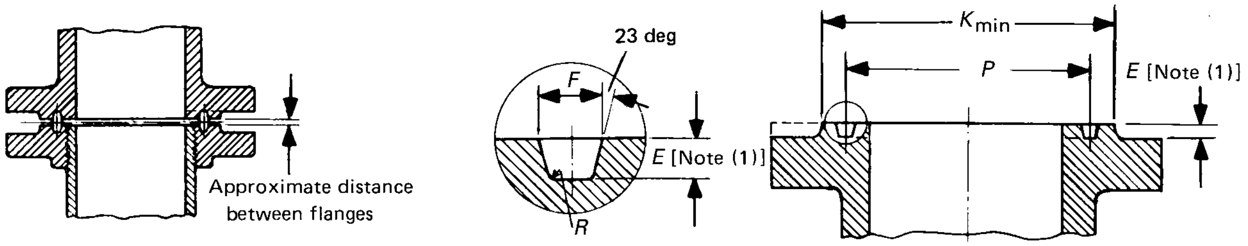

1	2	3	4	5	6	7	8	9	10	11	12
Nominal Size								Groove Dimensions			Radius at Bottom, *R*
Class 150 NPS	Class 300 NPS	Class 400 NPS (2)	Class 600 NPS	Class 900 NPS (3)	Class 1500 NPS	Class 2500 NPS	Groove Number	Pitch Diameter, *P*	Depth, *E* (1)	Width, *F*	
...	½	...	½	...	...	...	11	34.14	5.56	7.14	0.8
...	...	...	...	...	½	...	12	39.67	6.35	8.74	0.8
...	¾	...	¾	...	...	½	13	42.88	6.35	8.74	0.8
...	...	...	...	...	¾	...	14	44.45	6.35	8.74	0.8
1	...	...	...	...	...	...	15	47.62	6.35	8.74	0.8
...	1	...	1	...	1	¾	16	50.80	6.35	8.74	0.8
1¼	...	...	...	...	...	...	17	57.15	6.35	8.74	0.8
...	1¼	...	1¼	...	1¼	1	18	60.33	6.35	8.74	0.8
1½	...	...	...	...	...	...	19	65.07	6.35	8.74	0.8
...	1½	...	1½	...	1½	...	20	68.28	6.35	8.74	0.8
...	...	...	...	...	...	1¼	21	72.24	7.92	11.91	0.8
2	...	...	...	...	...	...	22	82.55	6.35	8.74	0.8
...	2	...	2	...	...	1½	23	82.55	7.92	11.91	0.8
...	...	...	...	...	2	...	24	95.25	7.92	11.91	0.8
2½	...	...	...	...	...	...	25	101.60	6.35	8.74	0.8
...	2½	...	2½	...	...	2	26	101.60	7.92	11.91	0.8
...	...	...	...	...	2½	...	27	107.95	7.92	11.91	0.8
...	...	...	...	...	...	2½	28	111.12	9.522	13.49	1.5
3	...	...	...	...	...	...	29	114.30	6.35	8.74	0.8
...	(4)	...	(4)	...	...	...	30	117.48	7.92	11.91	0.8
...	3 (4)	...	3 (4)	3	...	...	31	123.82	7.92	11.91	0.8
...	...	...	...	...	...	3	32	127.00	9.53	13.49	1.5
3½	...	...	...	...	...	...	33	131.78	6.35	8.74	0.8
...	3½	...	3½	...	...	...	34	131.78	7.92	11.91	0.8
...	...	...	...	...	3	...	35	136.52	7.92	11.91	0.8
4	...	...	...	...	...	...	36	149.22	6.35	8.74	0.8
...	4	4	4	4	...	...	37	149.22	7.92	11.91	0.8
...	...	...	...	...	...	4	38	157.18	11.13	16.66	1.5
...	...	...	...	...	4	...	39	161.92	7.92	11.91	0.8
5	...	...	...	...	...	...	40	171.45	6.35	8.74	0.8
...	5	5	5	5	...	...	41	180.98	7.92	11.91	0.8

Table 5 Dimensions of Ring Joint Facings (All Pressure Rating Classes)

13	14	15	16	17	18	19	20	21	22	23	24
Diameter of Raised Portion, *K*					Approximate Distance Between Flanges						
Class 150	Class 300 400 600	Class 900	Class 1500	Class 2500	Class 150	Class 300	Class 400	Class 600	Class 900	Class 1500	Class 2500
...	51.0	...	...	...	...	3	...	3	...	...	...
...	...	...	60.5	...	...	...	...	...	...	4	...
...	63.5	...	...	65.0	...	4	...	4	...	...	4
...	...	...	66.5	...	...	...	...	...	...	4	...
63.5	...	...	...	...	4	...	...	...	...	...	...
...	69.8	...	71.4	73.2	...	4	...	4	...	4	4
73.2	...	...	...	...	4	...	...	...	...	...	...
...	79.2	...	81.0	82.6	...	4	...	4	...	4	4
82.6	...	...	...	...	4	...	...	...	...	...	...
...	90.4	...	91.9	...	...	4	...	4	...	4	...
...	...	...	...	102	...	...	...	...	...	...	3
102	...	...	...	...	4	...	...	...	...	...	...
...	108	...	...	114	...	6	...	5	...	...	3
...	...	...	124	...	...	...	...	...	...	3	...
121	...	...	...	...	4	...	...	...	...	...	...
...	127	...	...	133	...	6	...	5	...	...	3
...	...	...	137	...	...	...	...	...	...	3	...
...	...	...	...	149	...	...	...	...	...	...	3
133	...	...	...	...	4	...	...	...	...	...	...
...	...	...	...	...	...	...	...	...	...	...	...
...	146	155	...	...	...	6	...	5	4	...	...
...	...	...	...	168	...	...	...	...	...	...	3
154	...	...	...	...	4	...	...	...	...	...	...
...	159	...	...	...	...	6	...	5	...	...	...
...	...	...	168	...	...	...	...	...	...	3	...
171	...	...	...	...	4	...	...	...	...	...	...
...	175	181	...	...	...	6	6	5	4	...	...
...	...	...	...	203	...	...	...	...	...	...	4
...	...	...	194	...	...	...	...	...	...	3	...
194	...	...	...	...	4	...	...	...	...	...	...
...	210	216	...	...	...	6	6	5	4	...	...

Table 5 Dimensions of Ring Joint Facings (All Pressure Rating Classes) (Cont'd)

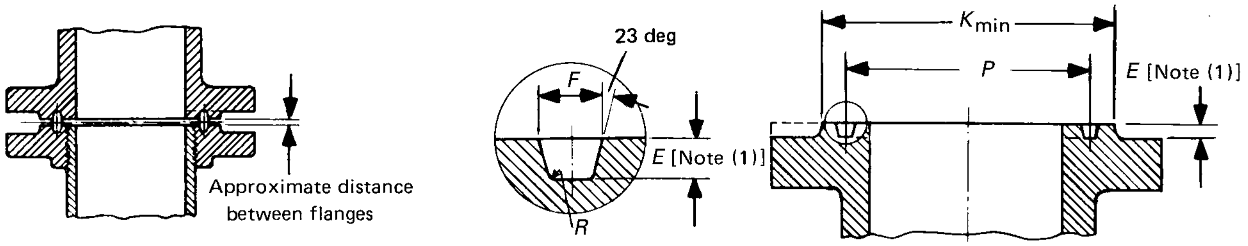

1	2	3	4	5	6	7	8	9	10	11	12
Nominal Size								Groove Dimensions			Radius at Bottom, *R*
Class 150 NPS	Class 300 NPS	Class 400 NPS (2)	Class 600 NPS	Class 900 NPS (3)	Class 1500 NPS	Class 2500 NPS	Groove Number	Pitch Diameter, *P*	Depth, *E* (1)	Width, *F*	
...	...	...	...	...	...	5	42	190.50	12.70	19.84	1.5
6	...	...	...	...	...	...	43	193.68	6.35	8.74	0.8
...	...	...	...	...	5	...	44	193.68	7.92	11.91	0.8
...	6	6	6	6	...	...	45	211.12	7.92	11.91	0.8
...	...	...	...	...	6	...	46	211.14	9.52	13.49	1.5
...	...	...	...	...	...	6	47	228.60	12.70	19.84	1.5
8	...	...	...	...	...	...	48	247.65	6.35	8.74	0.8
...	8	8	8	8	...	...	49	269.88	7.92	11.91	0.8
...	...	...	...	...	8	...	50	269.88	11.13	16.66	1.5
...	...	...	...	...	...	8	51	279.40	14.27	23.01	1.5
10	...	...	...	...	...	...	52	304.80	6.35	8.74	0.8
...	10	10	10	10	...	...	53	323.85	7.92	11.91	0.8
...	...	...	...	...	10	...	54	323.85	11.13	16.66	1.5
...	...	...	...	...	...	10	55	342.90	17.48	30.18	2.3
12	...	...	...	...	...	...	56	381.00	6.35	8.74	0.8
...	12	12	12	12	...	...	57	381.00	7.92	11.91	0.8
...	...	...	...	...	12	...	58	381.00	14.27	23.01	1.5
14	...	...	...	...	...	...	59	396.88	6.35	8.74	0.8
...	...	...	...	...	...	12	60	406.40	17.48	33.32	2.3
...	14	14	14	...	...	...	61	419.10	7.92	11.91	0.8
...	...	...	...	14	...	...	62	419.10	11.13	16.66	1.5
...	...	...	...	...	14	...	63	419.10	15.88	26.97	2.3
16	...	...	...	...	...	...	64	454.02	6.35	8.74	0.8
...	16	16	16	...	...	...	65	469.90	7.92	11.91	0.8
...	...	...	...	16	...	...	66	469.90	11.13	16.66	1.5
...	...	...	...	...	16	...	67	469.90	17.48	30.18	2.3
18	...	...	...	...	...	...	68	517.52	6.35	8.74	0.8
...	18	18	18	...	...	...	69	533.40	7.92	11.91	0.8
...	...	...	...	18	...	...	70	533.40	12.70	19.84	1.5
...	...	...	...	...	18	...	71	533.40	17.48	30.18	2.3
20	...	...	...	...	...	...	72	558.80	6.35	8.74	0.8
...	20	20	20	...	...	...	73	584.20	9.52	13.49	1.5

Table 5 Dimensions of Ring Joint Facings (All Pressure Rating Classes) (Cont'd)

13	14	15	16	17	18	19	20	21	22	23	24
Diameter of Raised Portion, *K*					Approximate Distance Between Flanges						
Class 150	Class 300 400 600	Class 900	Class 1500	Class 2500	Class 150	Class 300	Class 400	Class 600	Class 900	Class 1500	Class 2500
...	...	...	...	241	...	...	...	...	...	...	4
219	...	...	...	...	4	...	...	...	...	...	...
...	...	...	229	...	...	...	...	...	...	3	...
...	241	241	...	...	...	6	6	5	4	...	...
...	...	...	248	...	...	...	...	...	...	3	...
...	...	...	...	279	...	...	...	...	...	...	4
273	...	...	...	...	4	...	...	...	...	...	...
...	302	308	...	...	...	6	6	5	4	...	...
...	...	...	318	...	...	...	...	...	...	4	...
...	...	...	...	340	...	...	...	...	...	...	5
330	...	...	...	...	4	...	...	...	...	...	...
...	356	362	...	...	...	6	6	5	4	...	...
...	...	...	371	...	...	...	...	...	...	4	...
...	...	...	...	425	...	...	...	...	...	...	6
406	...	...	...	...	4	...	...	...	...	...	...
...	413	419	...	...	...	6	6	5	4	...	...
...	...	...	438	...	...	...	...	...	...	5	...
425	...	...	...	...	3	...	...	...	...	...	...
...	...	...	...	495	...	...	...	...	...	...	8
...	457	...	...	...	...	6	6	5	...	...	...
...	...	467	...	...	...	...	...	...	4	...	...
...	...	...	489	...	...	...	...	...	...	6	...
483	...	...	...	...	3	...	...	...	...	...	...
...	508	...	...	...	...	6	6	5	...	...	...
...	...	524	...	...	...	...	...	...	4	...	...
...	...	...	546	...	...	...	...	...	...	8	...
546	...	...	...	...	3	...	...	...	...	...	...
...	575	...	...	...	...	6	6	5	...	...	...
...	...	594	...	...	...	...	...	...	5	...	...
...	...	...	613	...	...	...	...	...	...	8	...
597	...	...	...	...	3	...	...	...	...	...	...
...	635	...	...	...	...	6	6	5	...	...	...

Table 5 Dimensions of Ring Joint Facings (All Pressure Rating Classes) (Cont'd)

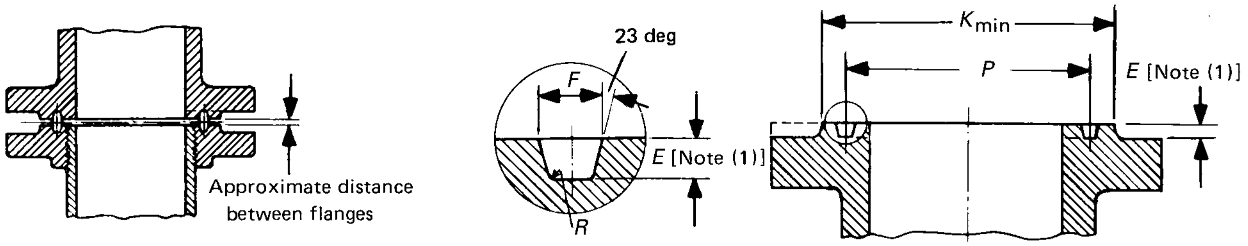

1	2	3	4	5	6	7	8	9	10	11	12
Nominal Size								Groove Dimensions			Radius at Bottom, *R*
Class 150 NPS	Class 300 NPS	Class 400 NPS (2)	Class 600 NPS	Class 900 NPS (3)	Class 1500 NPS	Class 2500 NPS	Groove Number	Pitch Diameter, *P*	Depth, *E* (1)	Width, *F*	
...	...	...	...	20	...	...	74	584.20	12.70	19.84	1.5
...	...	...	...	...	20	...	75	584.20	17.48	33.32	2.3
22	...	...	...	...	...	...	80	615.95	6.35	8.74	0.8
...	22	22	22	...	...	...	81	635.00	11.13	15.09	1.5
24	...	...	...	...	...	...	76	673.10	6.35	8.74	0.8
...	24	24	24	...	...	...	77	692.15	11.13	16.66	1.5
...	...	...	...	24	...	...	78	692.15	15.88	26.97	2.3
...	...	...	...	...	24	...	79	692.15	20.62	36.53	2.3

Table 5 Dimensions of Ring Joint Facings (All Pressure Rating Classes) (Cont'd)

13	14	15	16	17	18	19	20	21	22	23	24
Diameter of Raised Portion, *K*					Approximate Distance Between Flanges						
Class 150	Class 300 400 600	Class 900	Class 1500	Class 2500	Class 150	Class 300	Class 400	Class 600	Class 900	Class 1500	Class 2500
...	...	648	...	...	...	...	...	...	5	...	...
...	...	...	673	...	...	...	...	...	...	10	...
648	...	...	...	...	3	...	...	...	...	...	...
...	686	...	...	...	...	6	6	6	...	...	...
711	...	...	...	...	3	...	...	...	...	...	...
...	749	...	...	...	...	6	6	6	...	...	...
...	...	772	...	...	...	...	...	...	6	...	...
...	...	...	794	...	...	...	...	...	...	11	...

Table 5 Dimensions of Ring Joint Facings (All Pressure Rating Classes) (Cont'd)

GENERAL NOTES:
(a) Dimensions are in millimeters.
(b) For facing requirements for flanges and flanged fitting, see para. 6.4.1 and Figure 6.
(c) For facing requirements for lapped joints, see para. 6.4.3 and Figure 6.
(d) See para. 4.2.7 for marking requirements.

NOTES:
(1) The height of the raised portion is equal to the depth of the groove dimension, E, but is not subjected to the tolerances for E. Former full-face contour may be used.
(2) Use Class 600 in sizes NPS $\frac{1}{2}$ to NPS $3\frac{1}{2}$ for Class 400.
(3) Use Class 1500 in sizes NPS $\frac{1}{2}$ to NPS $2\frac{1}{2}$ for Class 900.
(4) For ring joints with lapped flanges in Classes 300 and 600, ring and groove number R30 is used instead of R31.

TOLERANCES:
E = (depth) +0.41, −0.00 mm
F = (width) ±0.20 mm
P = (pitch diameter) ±0.13 mm
R = (radius at bottom)
= $R \le 1.5$ + 0.8, −0.0 mm
= $R > 1.5 \pm 0.8$ mm
23 = deg (angle) ± $\frac{1}{2}$ deg

TABLE STARTS ON NEXT PAGE

(20)

Table 5C Dimensions of Ring Joint Facings (All Pressure Rating Classes)

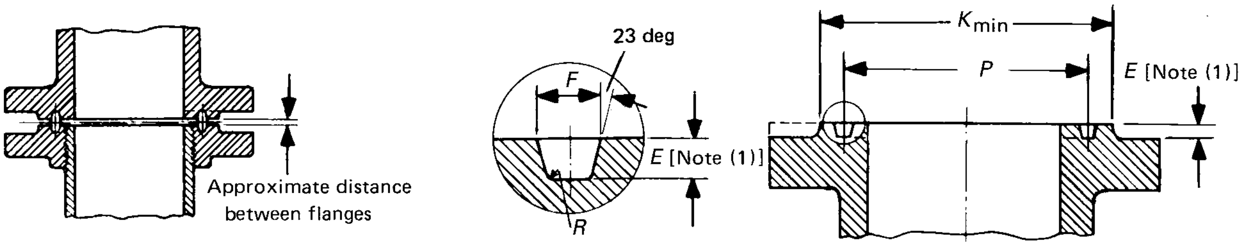

1	2	3	4	5	6	7	8	9	10	11	12
Nominal Pipe Size								Groove Dimensions			
Class 150	Class 300	Class 400 (2)	Class 600	Class 900 (3)	Class 1500	Class 2500	Groove Number	Pitch Diameter, *P*	Depth, *E* (1)	Width, *F*	Radius at Bottom, *R*
...	½	...	½	...	...	...	R11	1.344	0.219	0.281	0.03
...	...	...	...	...	½	...	12	1.562	0.250	0.344	0.03
...	¾	...	¾	...	...	½	13	1.688	0.250	0.344	0.03
...	...	...	...	...	¾	...	14	1.750	0.250	0.344	0.03
1	...	...	...	...	...	...	15	1.875	0.250	0.344	0.03
...	1	...	1	...	1	¾	16	2.000	0.250	0.344	0.03
1¼	...	...	...	...	...	...	17	2.250	0.250	0.344	0.03
...	1¼	...	1¼	...	1¼	1	18	2.375	0.250	0.344	0.03
1½	...	...	...	...	...	...	19	2.562	0.250	0.344	0.03
...	1½	...	1½	...	1½	...	20	2.688	0.250	0.344	0.03
...	...	...	...	...	...	1¼	21	2.844	0.312	0.469	0.03
2	...	...	...	...	...	...	22	3.250	0.250	0.344	0.03
...	2	...	2	...	...	1½	23	3.250	0.312	0.469	0.03
...	...	...	...	...	2	...	24	3.750	0.312	0.469	0.03
2½	...	...	...	...	...	...	25	4.000	0.250	0.344	0.03
...	2½	...	2½	...	...	2	26	4.000	0.312	0.469	0.03
...	...	...	...	...	2½	...	27	4.250	0.312	0.469	0.03
...	...	...	...	...	...	2½	28	4.375	0.375	0.531	0.06
3	...	...	...	...	...	...	29	4.500	0.250	0.344	0.03
...	(4)	...	(4)	...	...	...	30	4.625	0.312	0.469	0.03
...	3 (4)	...	3 (4)	3	...	...	31	4.875	0.312	0.469	0.03
...	...	...	...	...	...	3	32	5.000	0.375	0.531	0.06
3½	...	...	...	...	...	...	33	5.188	0.250	0.344	0.03
...	3½	...	3½	...	...	...	34	5.188	0.312	0.469	0.03
...	...	...	...	...	3	...	35	5.375	0.312	0.469	0.03
4	...	...	...	...	...	...	36	5.875	0.250	0.344	0.03
...	4	4	4	4	...	...	37	5.875	0.312	0.469	0.03
...	...	...	...	...	...	4	38	6.188	0.438	0.656	0.06
...	...	...	...	...	4	...	39	6.375	0.312	0.469	0.03
5	...	...	...	...	...	...	40	6.750	0.250	0.344	0.03
...	5	5	5	5	...	...	41	7.125	0.312	0.469	0.03

Table 5C Dimensions of Ring Joint Facings (All Pressure Rating Classes)

13	14	15	16	17	18	19	20	21	22	23	24
Diameter of Raised Portion, *K*					Approximate Distance Between Flanges						
Class 150	Class 300 400 600	Class 900	Class 1500	Class 2500	Class 150	Class 300	Class 400	Class 600	Class 900	Class 1500	Class 2500
...	2.00	...	...	...	...	0.12	...	0.12	...	...	...
...	...	...	2.38	...	...	...	...	...	...	0.16	...
...	2.50	...	...	2.56	...	0.16	...	0.16	...	...	0.16
...	...	...	2.62	...	...	...	...	...	...	0.16	...
2.50	...	...	...	...	0.16	...	...	...	...	...	...
...	2.75	...	2.81	2.88	...	0.16	...	0.16	...	0.16	0.16
2.88	...	...	...	...	0.16	...	...	...	...	...	...
...	3.12	...	3.19	3.25	...	0.16	...	0.16	...	0.16	0.16
3.25	...	...	...	...	0.16	...	...	...	...	...	...
...	3.56	...	3.62	...	...	0.16	...	0.16	...	0.16	...
...	...	...	...	4.00	...	...	...	...	...	...	0.12
4.00	...	...	...	...	0.16	...	...	...	...	...	...
...	4.25	...	...	4.50	...	0.22	...	0.19	...	...	0.12
...	...	...	4.88	...	...	...	...	...	...	0.12	...
4.75	...	...	...	...	0.16	...	...	...	...	...	...
...	5.00	...	...	5.25	...	0.22	...	0.19	...	...	0.12
...	...	...	5.38	...	...	...	...	...	...	0.12	...
...	...	...	...	5.88	...	...	...	...	...	...	0.12
5.25	...	...	...	...	0.16	...	...	...	...	...	...
...	...	...	...	...	...	...	...	...	...	...	...
...	5.75	6.12	...	...	...	0.22	...	0.19	0.16	...	...
...	...	...	...	6.62	...	...	...	...	...	...	0.12
6.06	...	...	...	...	0.16	...	...	...	...	...	...
...	6.25	...	...	...	...	0.22	...	0.19	...	...	...
...	...	...	6.62	...	...	...	...	...	...	0.12	...
6.75	...	...	...	...	0.16	...	...	...	...	...	...
...	6.88	7.12	...	...	...	0.22	0.22	0.19	0.16	...	...
...	...	...	...	8.00	...	...	...	...	...	...	0.16
...	...	...	7.62	...	...	...	...	...	...	0.12	...
7.62	...	...	...	...	0.16	...	...	...	...	...	...
...	8.25	8.50	...	...	...	0.22	0.22	0.19	0.16	...	...

Table 5C Dimensions of Ring Joint Facings (All Pressure Rating Classes) (Cont'd)

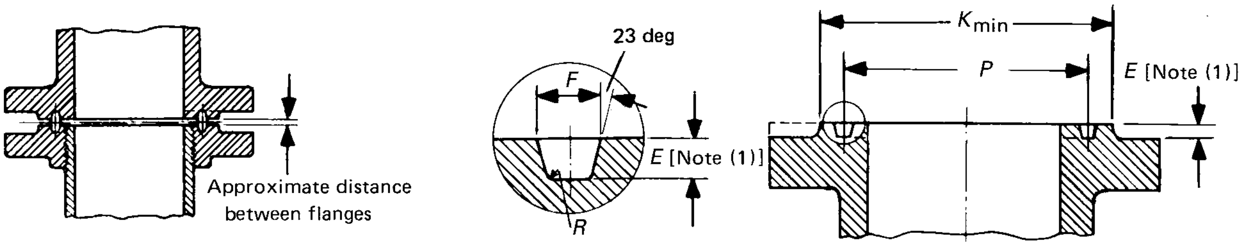

1	2	3	4	5	6	7	8	9	10	11	12
Nominal Pipe Size								Groove Dimensions			
Class 150	Class 300	Class 400 (2)	Class 600	Class 900 (3)	Class 1500	Class 2500	Groove Number	Pitch Diameter, *P*	Depth, *E* (1)	Width, *F*	Radius at Bottom, *R*
...	...	...	...	...	...	5	42	7.500	0.500	0.781	0.06
6	...	...	...	...	...	...	43	7.625	0.250	0.344	0.03
...	...	...	...	...	5	...	44	7.625	0.312	0.469	0.03
...	6	6	6	6	...	...	45	8.312	0.312	0.469	0.03
...	...	...	...	...	6	...	46	8.312	0.375	0.531	0.06
...	...	...	...	...	...	6	47	9.000	0.500	0.781	0.06
8	...	...	...	...	...	...	48	9.750	0.250	0.344	0.03
...	8	8	8	8	...	...	49	10.625	0.312	0.469	0.03
...	...	...	...	...	8	...	50	10.625	0.438	0.656	0.06
...	...	...	...	...	...	8	51	11.000	0.562	0.906	0.06
10	...	...	...	...	...	...	52	12.000	0.250	0.344	0.03
...	10	10	10	10	...	...	53	12.750	0.312	0.469	0.03
...	...	...	...	...	10	...	54	12.750	0.438	0.656	0.06
...	...	...	...	...	...	10	55	13.500	0.688	1.188	0.09
12	...	...	...	...	...	...	56	15.000	0.250	0.344	0.03
...	12	12	12	12	...	...	57	15.000	0.312	0.469	0.03
...	...	...	...	...	12	...	58	15.000	0.562	0.906	0.06
14	...	...	...	...	...	...	59	15.625	0.250	0.344	0.03
...	...	...	...	...	...	12	60	16.000	0.688	1.312	0.09
...	14	14	14	...	...	...	61	16.500	0.312	0.469	0.03
...	...	...	...	14	...	...	62	16.500	0.438	0.656	0.06
...	...	...	...	...	14	...	63	16.500	0.625	1.062	0.09
16	...	...	...	...	...	...	64	17.875	0.250	0.344	0.03
...	16	16	16	...	...	...	65	18.500	0.312	0.469	0.03
...	...	...	...	16	...	...	66	18.500	0.438	0.656	0.06
...	...	...	...	...	16	...	67	18.500	0.688	1.188	0.09
18	...	...	...	...	...	...	68	20.375	0.250	0.344	0.03
...	18	18	18	...	...	...	69	21.000	0.312	0.469	0.03
...	...	...	...	18	...	...	70	21.000	0.500	0.781	0.06
...	...	...	...	...	18	...	71	21.000	0.688	1.188	0.09
20	...	...	...	...	...	...	72	22.000	0.250	0.344	0.03
...	20	20	20	...	...	...	73	23.000	0.375	0.531	0.06

Table 5C Dimensions of Ring Joint Facings (All Pressure Rating Classes) (Cont'd)

13	14	15	16	17	18	19	20	21	22	23	24
Diameter of Raised Portion, *K*					Approximate Distance Between Flanges						
Class 150	Class 300 400 600	Class 900	Class 1500	Class 2500	Class 150	Class 300	Class 400	Class 600	Class 900	Class 1500	Class 2500
...	...	...	...	9.50	...	...	...	...	...	...	0.16
8.62	...	...	...	...	0.16	...	...	...	...	...	...
...	...	...	9.00	...	...	...	...	...	...	0.12	...
...	9.50	9.50	...	...	...	0.22	0.22	0.19	0.16	...	...
...	...	...	9.75	...	...	...	...	...	...	0.12	...
...	...	...	...	11.00	...	...	...	...	...	...	0.16
10.75	...	...	...	...	0.16	...	...	...	...	...	
...	11.88	12.12	...	...	...	0.22	0.22	0.19	0.16	...	...
...	...	...	12.50	...	...	...	...	...	...	0.16	...
...	...	...	...	13.38	...	...	...	...	...	...	0.19
13.00	...	...	...	...	0.16	...	...	...	...	...	...
...	14.00	14.25	...	...	...	0.22	0.22	0.19	0.16	...	...
...	...	...	14.62	...	...	...	...	...	...	0.16	...
...	...	...	...	16.75	...	...	...	...	...	...	0.25
16.00	...	...	...	...	0.16	...	...	...	...	...	...
...	16.25	16.50	...	...	...	0.22	0.22	0.19	0.16	...	...
...	...	...	17.25	...	...	...	...	...	...	0.19	...
16.75	...	...	...	...	0.12	...	...	...	...	...	...
...	...	...	...	19.50	...	...	...	...	...	...	0.31
...	18.00	...	...	...	...	0.22	0.22	0.19	...	...	...
...	...	18.38	...	...	...	...	...	...	0.16	...	...
...	...	...	19.25	...	...	...	...	...	...	0.22	...
19.00	...	...	...	...	0.12	...	...	...	...	...	...
...	20.00	...	...	...	...	0.22	0.22	0.19	...	...	...
...	...	20.62	...	...	...	...	...	...	0.16	...	...
...	...	...	21.50	...	...	...	...	...	...	0.31	...
21.50	...	...	...	...	0.12	...	...	...	...	...	...
...	22.62	...	...	...	...	0.22	0.22	0.19	...	...	...
...	...	23.38	...	...	...	...	...	...	0.19	...	...
...	...	...	24.12	...	...	...	...	...	...	0.31	...
23.50	...	...	...	...	0.12	...	...	...	...	...	...
...	25.00	...	...	...	...	0.22	0.22	0.19	...	...	...

Table 5C Dimensions of Ring Joint Facings (All Pressure Rating Classes) (Cont'd)

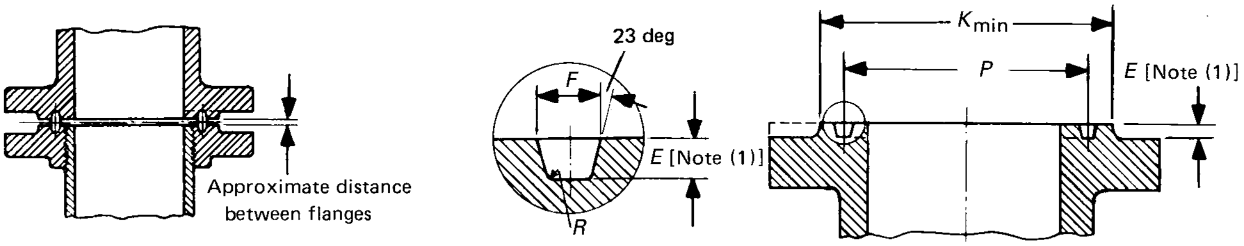

1	2	3	4	5	6	7	8	9	10	11	12
Nominal Pipe Size								Groove Dimensions			
Class 150	Class 300	Class 400 (2)	Class 600	Class 900 (3)	Class 1500	Class 2500	Groove Number	Pitch Diameter, *P*	Depth, *E* (1)	Width, *F*	Radius at Bottom, *R*
...	...	...	...	20	...	...	74	23.000	0.500	0.781	0.06
...	...	...	...	...	20	...	75	23.000	0.688	1.312	0.09
22	...	...	...	...	...	...	80	24.250	0.250	0.344	0.03
...	22	22	22	...	...	...	81	25.000	0.438	0.594	0.06
24	...	...	...	...	...	...	76	26.500	0.250	0.344	0.03
...	24	24	24	...	...	...	77	27.250	0.438	0.656	0.06
...	...	...	...	24	...	...	78	27.250	0.625	1.062	0.09
...	...	...	...	...	...	...	...	...	...	...	...
...	...	...	...	...	24	...	79	27.250	0.812	1.438	0.09

Table 5C Dimensions of Ring Joint Facings (All Pressure Rating Classes) (Cont'd)

13	14	15	16	17	18	19	20	21	22	23	24
Diameter of Raised Portion, *K*					Approximate Distance Between Flanges						
Class 150	Class 300 400 600	Class 900	Class 1500	Class 2500	Class 150	Class 300	Class 400	Class 600	Class 900	Class 1500	Class 2500
...	...	25.50	...	...	...	...	...	...	0.19	...	...
...	...	...	26.50	...	...	...	...	...	...	0.38	...
25.50	...	...	...	...	0.12	...	...	...	...	...	...
...	27.00	...	...	...	...	0.25	0.25	0.22	...	...	...
...	...	...	...	...	...	...	...	...	...	...	...
28.00	...	...	...	...	0.12	...	...	...	...	...	...
...	29.50	...	...	...	...	0.25	0.25	0.22	...	...	...
...	...	30.38	...	...	...	...	...	...	0.22	...	...
...	...	...	31.25	...	...	...	...	...	...	0.44	...

Table 5C Dimensions of Ring Joint Facings (All Pressure Rating Classes) (Cont'd)

GENERAL NOTES:

(a) Dimensions are in inches.

(b) For facing requirements for flanges and flanged fittings, see para. 6.4.1 and Figure 6.

(c) For facing requirements for lapped joints, see para. 6.4.3 and Figure 6.

(d) See para 4.2.7 for marking requirements.

NOTES:

(1) The height of the raised portion is equal to the depth of groove dimension *E*, but is not subjected to the tolerances for *E*. Former full-face contour may be used.

(2) Use Class 600 in sizes NPS $\frac{1}{2}$ to NPS $3\frac{1}{2}$ for Class 400.

(3) Use Class 1500 in sizes NPS $\frac{1}{2}$ to NPS $2\frac{1}{2}$ for Class 900.

(4) For ring joints with lapped flanges in Classes 300 and 600, ring and groove number R30 are used instead of R31.

TOLERANCES:

E	=	(depth) +0.016, −0.000 in.
F	=	(width) ±0.008 in.
P	=	(pitch diameter) ±0.005 in.
R	=	(radius at bottom)
	=	$R \le 0.06$ +0.03, −0.00 in.
	=	$R > 0.06 \pm 0.03$ in.
23 deg	=	(angle) ± $\frac{1}{2}$ deg

Table 6 Reducing Threaded and Slip-On Pipe Flanges for Classes 150 Through 2500 Pipe Flanges (20)

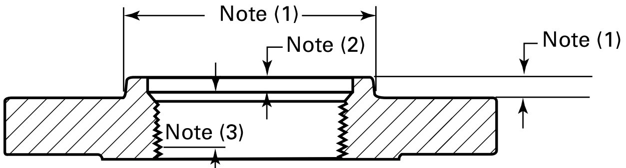

Threaded

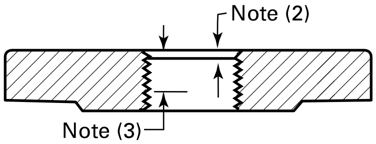

Blind Flange

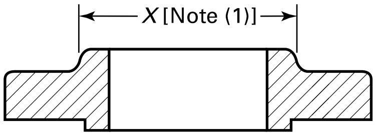

Slip-On Welding

1	2	3	4	5	6
Nominal Pipe Size(4)	Smallest Size of Reducing Outlet Requiring Hub Flanges (1)	Nominal Pipe Size (4)	Smallest Size of Reducing Outlet Requiring Hub Flanges (1)	Nominal Pipe Size (4)	Smallest Size of Reducing Outlet Requiring Hub Flanges (1)
NPS	NPS	NPS	NPS	NPS	NPS
1	½	3½	1½	12	3½
1¼	½	4	1½	14	3½
1½	½	5	1½	16	4
2	1	6	2½	18	4
2½	1¼	8	3	20	4
3	1¼	10	3½	24	4

GENERAL NOTE: Dimensions are in millimeters.

NOTES:
(1) The hub dimensions shall be at least as large as those of the standard flanges of the size to which the reduction is being machined, except flanges reducing to a size smaller than those of Columns 2, 4, and 6 may be made from blind flanges (see Example 2).
(2) Class 150 flanges do not have a counterbore. Class 300 and higher pressure flanges will have depth of counterbore *Q* of 6.4 mm for NPS 2 and smaller tapping and 9.7 mm for NPS 2½ and larger. The diameter *Q* of counterbore is the same as that given in the tables of threaded flanges for the corresponding tapping.
(3) Minimum length of effective threads shall be at least equal dimension *T* of the corresponding pressure class threaded flange as shown in tables but does not necessarily extend for the face of the flange. For thread of threaded flanges, see para. 6.9.
(4) For method of designating reducing threaded and reducing slip-on flanges, see para. 3.3 and Examples below.

EXAMPLES:
(1) The size designation is NPS 6 × 2½ — Class 300 reducing threaded flange. This flange has the following dimensions:
NPS 2½ = taper pipe thread tapping (ASME B1.20.1)
318 mm = diameter of regular NPS 6 Class 300 threaded flange
35.1 mm = thickness of regular NPS 6 Class 300 threaded flange
178 mm = diameter of hub for regular NPS 5 Class 300 threaded flange. Hub diameter may be one size small to reduce machining. In this example, a hub diameter of NPS 2½ would be the smallest acceptable.
15.7 mm = height of hub for regular NPS 5 Class 300 threaded flange
(2) The size designation is NPS 6 × 2 — Class 300 reducing threaded flange. Use regular NPS 6 Class 300 blind flange tapped with NPS 2 taper pipe thread (ASME B1.20.1).

(20) **Table 6C Reducing Threaded and Slip-On Pipe Flanges for Classes 150 Through 2500 Pipe Flanges**

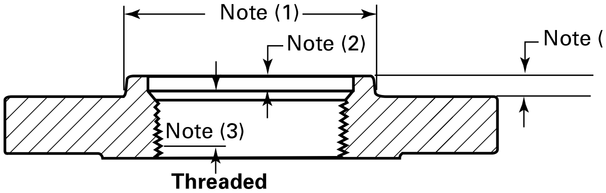

Threaded

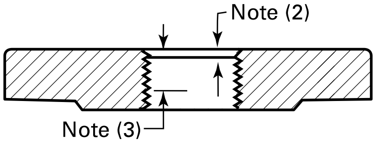

Blind Flange

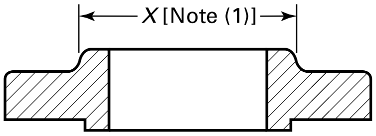

Slip-On Welding

1	2	3	4	5	6
Nominal Pipe Size (4)	Smallest Size of Reducing Outlet Requiring Hub Flanges (1)	Nominal Pipe Size (4)	Smallest Size of Reducing Outlet Requiring Hub Flanges (1)	Nominal Pipe Size (4)	Smallest Size of Reducing Outlet Requiring Hub Flanges (1)
1	$\frac{1}{2}$	$3\frac{1}{2}$	$1\frac{1}{2}$	12	$3\frac{1}{2}$
$1\frac{1}{4}$	$\frac{1}{2}$	4	$1\frac{1}{2}$	14	$3\frac{1}{2}$
$1\frac{1}{2}$	$\frac{1}{2}$	5	$1\frac{1}{2}$	16	4
2	1	6	$2\frac{1}{2}$	18	4
$2\frac{1}{2}$	$1\frac{1}{4}$	8	3	20	4
3	$1\frac{1}{4}$	10	$3\frac{1}{2}$	24	4

GENERAL NOTE: Dimensions are in inches.

NOTES:

(1) The hub dimensions shall be at least as large as those of the standard flanges of the size to which the reduction is being made, except flanges reducing to a size smaller than those of columns 2, 4, and 6 may be made from blind flanges (see Example 2).

(2) Class 150 flanges do not have a counterbore. Class 300 and higher pressure flanges will have a depth of counterbore of 0.25 in. for NPS 2 and smaller tapping and 0.38 in. for NPS $2\frac{1}{2}$ and larger. The diameter Q of counterbore is the same as that given in the tables of the threaded flanges for the corresponding tapping.

(3) The minimum length of effective threads shall be at least equal to dimension T of the corresponding pressure class threaded flange as shown in the tables but does not necessarily extend for the face of the flange. For thread of threaded flanges, see para. 6.9.

(4) For the method of designating reducing threaded and reducing slip-on flanges, see para. 3.3 and the example below.

EXAMPLES:

(1) The size designation is NPS 6 × $2\frac{1}{2}$ — Class 300 reducing threaded flange. This flange has the following dimensions:

NPS $2\frac{1}{2}$ = taper pipe thread tapping (ASME B1.20.1)
12.50 in. = diameter of regular NPS 6 Class 300 threaded flange
1.38 in. = thickness of regular NPS 6 Class 300 threaded flange
7.00 in. = diameter of hub for regular NPS 5 Class 300 threaded flange. Hub diameter may be one size smaller to reduce machining. In this example, a hub diameter of NPS $2\frac{1}{2}$ would be the smallest acceptable.
0.63 in. = height of hub for regular NPS 5 Class 300 threaded flange

Other dimensions the same as for regular NPS 6 Class 300 threaded flange, Table 12C

(2) The size designation is NPS 6 × 2 — Class 300 reducing threaded flange. Use regular NPS 6 Class 300 blind flange tapped with NPS 2 taper pipe thread (ASME B1.20.1).

Table 7 Templates for Drilling Class 150 Pipe Flanges and Flanged Fittings (20)

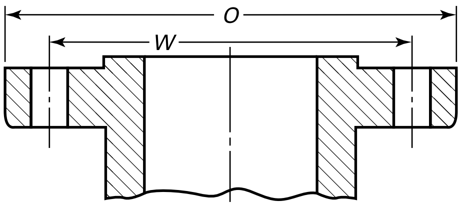

Flange

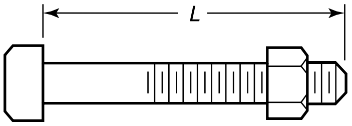

Machine Bolt With Nuts

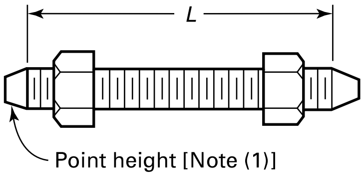

Stud Bolt With Nuts

1	2	3	4	5	6	7	8	9
						Length of Bolts, *L* (4)		
		Drilling (2), (3)				Stud Bolts (1)		Machine Bolts
Nominal Pipe Size	Outside Diameter of Flange, *O*	Diameter of Bolt Circle, *W*	Diameter of Bolt Holes, in.	Number of Bolts	Diameter of Bolts, in.	1.5-mm Raised Face	Ring Joint	1.5-mm Raised Face
1/2	89	60.5	5/8	4	1/2	55	...	50
3/4	99	69.8	5/8	4	1/2	65	...	50
1	108	79.2	5/8	4	1/2	65	75	55
1 1/4	117	88.9	5/8	4	1/2	70	85	55
1 1/2	127	98.6	5/8	4	1/2	70	85	65
2	152	120.6	3/4	4	5/8	85	95	70
2 1/2	178	139.7	3/4	4	5/8	90	100	75
3	190	152.4	3/4	4	5/8	90	100	75
3 1/2	216	177.8	3/4	8	5/8	90	100	75
4	229	190.5	3/4	8	5/8	90	100	75
5	254	215.9	7/8	8	3/4	95	110	85
6	279	241.3	7/8	8	3/4	100	115	85
8	343	298.4	7/8	8	3/4	110	120	90
10	406	362.0	1	12	7/8	115	125	100
12	483	431.8	1	12	7/8	120	135	100
14	533	476.2	1 1/8	12	1	135	145	115
16	597	539.8	1 1/8	16	1	135	145	115
18	635	577.8	1 1/4	16	1 1/8	145	160	125
20	693	635.0	1 1/4	20	1 1/8	160	170	140
22	749	692.2	1 3/8	20	1 1/4	170	185	150
24	813	749.3	1 3/8	20	1 1/4	170	185	150

GENERAL NOTES:

(a) Dimensions are in millimeters, except for diameters of bolts and bolt holes, which are in inches.

(b) For other dimensions, see Tables 8 and 9.

NOTES:

(1) The length of the stud bolt does not include the height of the points (see para. 6.10.2).

(2) For flange bolt holes, see para. 6.5.

(3) For spot facing, see para. 6.6.

(4) Bolt lengths not shown in the table may be determined in accordance with Nonmandatory Appendix C (see para. 6.10.2).

Table 7C Templates for Drilling Class 150 Pipe Flanges and Flanged Fittings

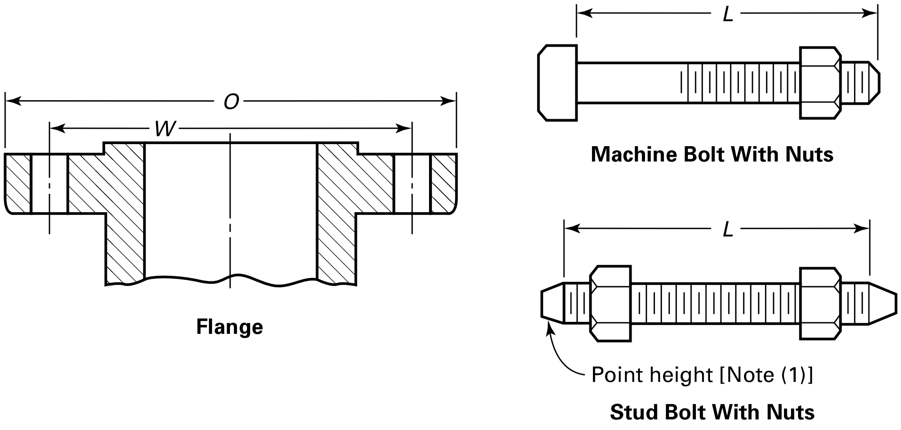

1	2	3	4	5	6	7	8	9
		Drilling (2), (3)				Length of Bolts, *L* (4)		
						Stud Bolts (1)		Machine Bolts
Nominal Pipe Size, NPS	Outside Diameter of Flange, *O*	Diameter of Bolt Circle, *W*	Diameter of Bolt Holes	Number of Bolts	Diameter of Bolts	Raised Face 0.06 in.	Ring Joint	Raised Face 0.06 in.
½	3.50	2.38	⅝	4	½	2.25	…	2.00
¾	3.88	2.75	⅝	4	½	2.50	…	2.00
1	4.25	3.12	⅝	4	½	2.50	3.00	2.25
1¼	4.62	3.50	⅝	4	½	2.75	3.25	2.25
1½	5.00	3.88	⅝	4	½	2.75	3.25	2.50
2	6.00	4.75	¾	4	⅝	3.25	3.75	2.75
2½	7.00	5.50	¾	4	⅝	3.50	4.00	3.00
3	7.50	6.00	¾	4	⅝	3.50	4.00	3.00
3½	8.50	7.00	¾	8	⅝	3.50	4.00	3.00
4	9.00	7.50	¾	8	⅝	3.50	4.00	3.00
5	10.00	8.50	⅞	8	¾	3.75	4.25	3.25
6	11.00	9.50	⅞	8	¾	4.00	4.50	3.25
8	13.50	11.75	⅞	8	¾	4.25	4.75	3.50
10	16.00	14.25	1	12	⅞	4.50	5.00	4.00
12	19.00	17.00	1	12	⅞	4.75	5.25	4.00
14	21.00	18.75	1⅛	12	1	5.25	5.75	4.50
16	23.50	21.25	1⅛	16	1	5.25	5.75	4.50
18	25.00	22.75	1¼	16	1⅛	5.75	6.25	5.00
20	27.50	25.00	1¼	20	1⅛	6.25	6.75	5.50
22	29.50	27.25	1⅜	20	1¼	6.75	7.25	6.00
24	32.00	29.50	1⅜	20	1¼	6.75	7.25	6.00

GENERAL NOTES:
(a) Dimensions are in inches.
(b) For other dimensions, see Tables 8C and 9C.

NOTES:
(1) The length of the stud bolt does not include the height of the points (see para. 6.10.2).
(2) For flange bolt holes, see para. 6.5.
(3) For spot facing, see para. 6.6.
(4) Bolt lengths not shown in the table may be determined in accordance with Nonmandatory Appendix C (see para. 6.10.2).

Table 8 Dimensions of Class 150 Flanges

(20)

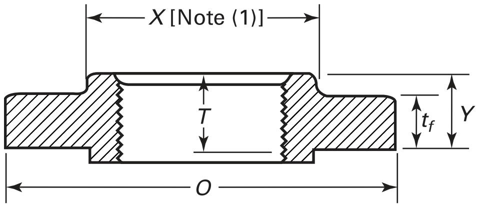

Threaded

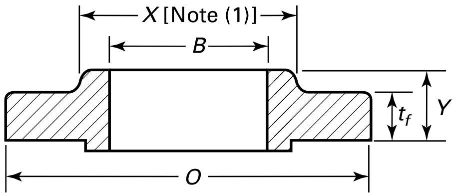

Slip-On Welding

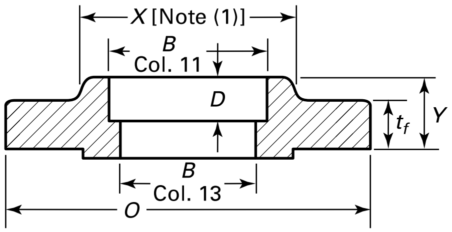

Socket Welding (NPS 1/2 to 3 Only)

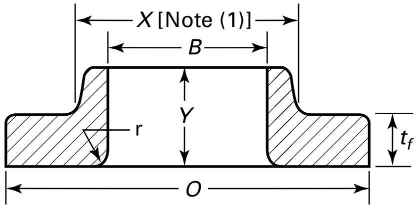

Lapped

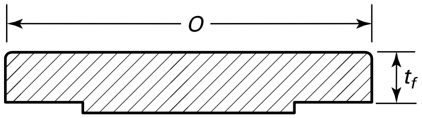

Blind

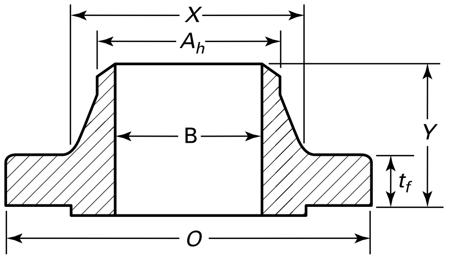

Welding Neck

1	2	3	4	5	6	7	8	9	10	11	12	13	14	15
						Length Through Hub				Bore				
Nominal Pipe Size, NPS	Outside Diameter of Flange, *O*	Minimum Thickness of Flange, t_f (2)–(4)	Minimum Thickness Lap Joint, t_f	Diameter of Hub, *X*	Hub Diameter Beginning of Chamfer Welding Neck, A_h (5)	Threaded/ Slip-on/ Socket Welding, *Y*	Lapped, *Y*	Welding Neck, *Y*	Minimum Thread Length Threaded, *T* (6)	Minimum Slip-on/ Socket Welding, *B*	Minimum Lapped, *B*	Welding Neck/ Socket Welding, *B* (7)	Corner Bore Radius of Lapped Flange and Pipe, *r*	Depth of Socket, *D*
1/2	89	9.7	11.2	30	21.3	14	16	46	16	22.4	22.9	15.7	3	10
3/4	99	11.2	12.7	38	26.7	14	16	51	16	27.7	28.2	20.8	3	11
1	108	12.7	14.2	49	33.5	16	18	54	18	34.5	35.1	26.7	3	13
1 1/4	117	14.2	15.7	59	42.2	19	21	56	21	43.2	43.7	35.1	5	14

Table 8 Dimensions of Class 150 Flanges (Cont'd)

1	2	3	4	5	6	7	8	9	10	11	12	13	14	15
						Length Through Hub				Bore				
Nominal Pipe Size, NPS	Outside Diameter of Flange, O	Minimum Thickness of Flange, t_f (2)–(4)	Minimum Thickness Lap Joint, t_f	Diameter of Hub, X	Hub Diameter Beginning of Chamfer Welding Neck, A_h (5)	Threaded/ Slip-on/ Socket Welding, Y	Lapped, Y	Welding Neck, Y	Minimum Thread Length Threaded, T (6)	Minimum Slip-on/ Socket Welding, B	Minimum Lapped, B	Welding Neck/ Socket Welding, B (7)	Corner Bore Radius of Lapped Flange and Pipe, r	Depth of Socket, D
1½	127	15.9	17.5	65	48.3	21	22	60	22	49.5	50.0	40.9	6	16
2	152	17.5	19.0	78	60.5	24	25	62	25	61.9	62.5	52.6	8	18
2½	178	20.6	22.4	90	73.2	27	28	68	28	74.7	75.4	62.7	8	19
3	190	22.4	23.9	108	88.9	28	30	68	30	90.7	91.4	78.0	10	21
3½	216	22.4	23.9	122	101.6	30	32	70	32	103.4	104.1	90.2	10	...
4	229	22.4	23.9	135	114.3	32	33	75	33	116.1	116.8	102.4	11	...
5	254	22.4	23.9	164	141.2	35	37	87	37	143.8	144.5	128.3	11	...
6	279	23.9	25.4	192	168.4	38	40	87	40	170.7	171.4	154.2	13	...
8	343	26.9	28.4	246	219.2	43	44	100	44	221.5	222.2	202.7	13	...
10	406	28.4	30.2	305	273.0	48	49	100	49	276.4	277.4	254.5	13	...
12	483	30.2	31.8	365	323.8	54	56	113	56	327.2	328.2	304.8	13	...
14	553	33.3	35.1	400	355.6	56	79	125	57	359.2	360.2	(8)	13	...
16	597	35.1	36.6	457	406.4	62	87	125	64	410.5	411.2	(8)	13	...
18	635	38.1	39.6	505	457.2	67	97	138	68	461.8	462.3	(8)	13	...
20	698	41.1	42.9	559	508.0	71	103	143	73	513.1	514.4	(8)	13	...
22	749	44.4	46.0	610	558.8	78	108	148	...	564.4	565.2	(8)	13	...
24	813	46.0	47.8	663	609.6	81	111	151	83	616.0	616.0	(8)	13	...

GENERAL NOTES:
(a) Dimensions are in millimeters.
(b) For tolerance, see section 7.
(c) For facings, see para. 6.4.
(d) For flange bolt holes, see para. 6.5 and Table 7.
(e) For spot facing, see para. 6.6.
(f) For reducing threaded and slip-on flanges, see Table 6.
(g) Blind flanges may be made with or without hubs at the manufacturer's option.
(h) For reducing welding neck flanges, see para. 6.8.

NOTES:
(1) This dimension is for large end of hub, which may be straight or tapered. Taper shall not exceed 7 deg on threaded, slip-on, socket-welding, and lapped flanges. This dimension is defined as the diameter at the intersection between the hub taper and back face of the flange.

Table 8 Dimensions of Class 150 Flanges (Cont'd)

NOTES: (Cont'd)

(2) The minimum thickness of these loose flanges, in sizes NPS 3½ and smaller, is slightly greater than the thickness of flanges on fittings, Table 9, which are reinforced by being cast integral with the body of the fitting.

(3) These flanges may be supplied with a flat face. The flat face may be either the full t_f dimension of thickness plus 2 mm or the t_f dimension thickness without the raised face height. See para 6.3.2 for additional restrictions.

(4) The flange dimensions illustrated are for regularly furnished 1.5-mm raised face (except lapped); for requirements of other facings, see Figure 6.

(5) For welding end bevel (see para. 6.7).

(6) For thread of threaded flanges, see para. 6.9.

(7) Dimensions in Column 13 correspond to the inside diameters of pipe as given in ASME B36.10M for standard wall pipe. Thickness of standard wall is the same as Schedule 40 in sizes NPS 10 and smaller. Tolerances in para. 7.5.2 apply. These bore sizes are furnished unless otherwise specified by the purchaser.

(8) To be specified by the purchaser.

(20)

Table 8C Dimensions of Class 150 Flanges

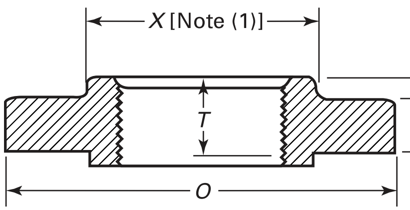

Threaded

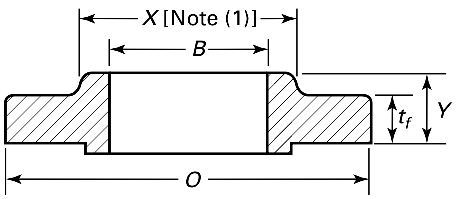

Slip-On Welding

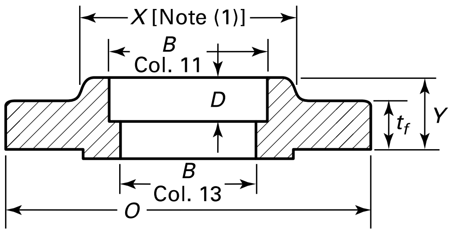

Socket Welding (NPS 1/2 to 3 Only)

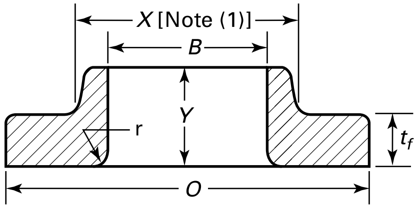

Lapped

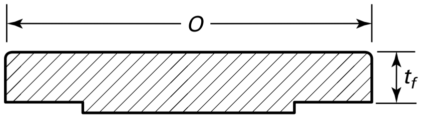

Blind

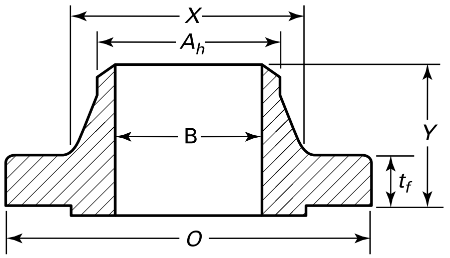

Welding Neck

1	2	3	4	5	6	7	8	9	10	11	12	13	14	15
						Length Through Hub				Bore				
Nominal Pipe Size	Outside Diameter of Flange, O	Minimum Thickness of Flange, t_f (2)–(4)	Minimum Thickness Lap Joint	Diameter of Hub, X	Diameter Beginning of Chamfer Welding Neck, A_h (5)	Threaded Slip-On Socket Welding, Y	Lapped, Y	Welding Neck, Y	Minimum Thread Length Threaded, T (6)	Minimum Slip-On Socket Welding, B	Minimum Lapped, B	Welding Neck/ Socket Welding, B (7)	Corner Bore Radius of Lapped Flange and Pipe, r	Depth of Socket, D
1/2	3.50	0.38	0.44	1.19	0.84	0.56	0.62	1.81	0.62	0.88	0.90	0.62	0.12	0.38
3/4	3.88	0.44	0.50	1.50	1.05	0.56	0.62	2.00	0.62	1.09	1.11	0.82	0.12	0.44
1	4.25	0.50	0.56	1.94	1.32	0.62	0.69	2.12	0.69	1.36	1.38	1.05	0.12	0.50
1 1/4	4.62	0.56	0.62	2.31	1.66	0.75	0.81	2.19	0.81	1.70	1.72	1.38	0.19	0.56
1 1/2	5.00	0.62	0.69	2.56	1.90	0.81	0.88	2.38	0.88	1.95	1.97	1.61	0.25	0.62
2	6.00	0.69	0.75	3.06	2.38	0.94	1.00	2.44	1.00	2.44	2.46	2.07	0.31	0.69

Table 8C Dimensions of Class 150 Flanges (Cont'd)

1	2	3	4	5	6	7	8	9	10	11	12	13	14	15
						Length Through Hub				Bore				
Nominal Pipe Size	Outside Diameter of Flange, *O*	Minimum Thickness of Flange, t_f (2)–(4)	Minimum Thickness Lap Joint	Diameter of Hub, *X*	Diameter Beginning of Chamfer Welding Neck, A_h (5)	Threaded Slip-On Socket Welding, *Y*	Lapped, *Y*	Welding Neck, *Y*	Minimum Thread Length Threaded, *T* (6)	Minimum Slip-On Socket Welding, *B*	Minimum Lapped, *B*	Welding Neck/ Socket Welding, *B* (7)	Corner Bore Radius of Lapped Flange and Pipe, *r*	Depth of Socket, *D*
2½	7.00	0.81	0.88	3.56	2.88	1.06	1.12	2.69	1.12	2.94	2.97	2.47	0.31	0.75
3	7.50	0.88	0.94	4.25	3.50	1.12	1.19	2.69	1.19	3.57	3.60	3.07	0.38	0.81
3½	8.50	0.88	0.94	4.81	4.00	1.19	1.25	2.75	1.25	4.07	4.10	3.55	0.38	...
4	9.00	0.88	0.94	5.31	4.50	1.25	1.31	2.94	1.31	4.57	4.60	4.03	0.44	...
5	10.00	0.88	0.94	6.44	5.56	1.38	1.44	3.44	1.44	5.66	5.69	5.05	0.44	...
6	11.00	0.94	1.00	7.56	6.63	1.50	1.56	3.44	1.56	6.72	6.75	6.07	0.50	...
8	13.50	1.06	1.12	9.69	8.63	1.69	1.75	3.94	1.75	8.72	8.75	7.98	0.50	...
10	16.00	1.12	1.19	12.00	10.75	1.88	1.94	3.94	1.94	10.88	10.92	10.02	0.50	...
12	19.00	1.19	1.25	14.38	12.75	2.12	2.19	4.44	2.19	12.88	12.92	12.00	0.50	...
14	21.00	1.31	1.38	15.75	14.00	2.19	3.12	4.94	2.25	14.14	14.18	(8)	0.50	...
16	23.50	1.38	1.44	18.00	16.00	2.44	3.44	4.94	2.50	16.16	16.19	(8)	0.50	...
18	25.00	1.50	1.56	19.88	18.00	2.62	3.81	5.44	2.69	18.18	18.20	(8)	0.50	...
20	27.50	1.62	1.69	22.00	20.00	2.81	4.06	5.62	2.88	20.20	20.25	(8)	0.50	...
22	29.50	1.75	1.81	24.00	22.00	3.06	4.25	5.82	...	22.22	22.25	(8)	0.50	...
24	32.00	1.81	1.88	26.12	24.00	3.19	4.38	5.94	3.25	24.25	24.25	(8)	0.50	...

GENERAL NOTES:

(a) Dimensions are in inches.

(b) For tolerances, see section 7.

(c) For facings, see para. 6.4.

(d) For flange bolt holes, see para. 6.5 and Table 7C.

(e) For spot facing, see para. 6.6.

(f) For reducing threaded and slip-on flanges, see Table 6C.

(g) Blind flanges may be made with or without hubs at the manufacturer's option.

(h) For reducing welding neck flanges, see para. 6.8.

NOTES:

(1) This dimension is for the large end of the hub, which may be straight or tapered. Taper shall not exceed 7 deg on threaded, slip-on, socket-welding, and lapped flanges.

(2) The minimum thickness of these loose flanges, in sizes NPS 3½ and smaller, is slightly greater than the thickness of flanges on fittings, Table 9C, which are reinforced by being cast integral with the body of the fitting.

(3) When these flanges are required with flat face, the flat face may be either the full t_f dimension thickness plus 0.06 in. or the t_f dimension thickness without the raised face height. See para. 6.3.2 for additional restrictions.

Table 8C Dimensions of Class 150 Flanges (Cont'd)

NOTES: (Cont'd)

(4) The flange dimensions illustrated are for regularly furnished 0.06-in. raised face (except lapped); for requirements of other facings, see Figure 6.

(5) For welding end bevel, see para. 6.7.

(6) For thread of threaded flanges, see para. 6.9.

(7) Dimensions in column 13 correspond to the inside diameters of pipe as given in ASME B36.10M for standard wall pipe. The thickness of standard wall is the same as Schedule 40 in sizes NPS 10 and smaller. Tolerances in para. 7.5.2 apply. These bore sizes are furnished unless otherwise specked by the purchaser.

(8) To be specified by the purchaser.

TABLE STARTS ON NEXT PAGE

(20)

Table 9 Dimensions of Class 150 Flanged Fittings

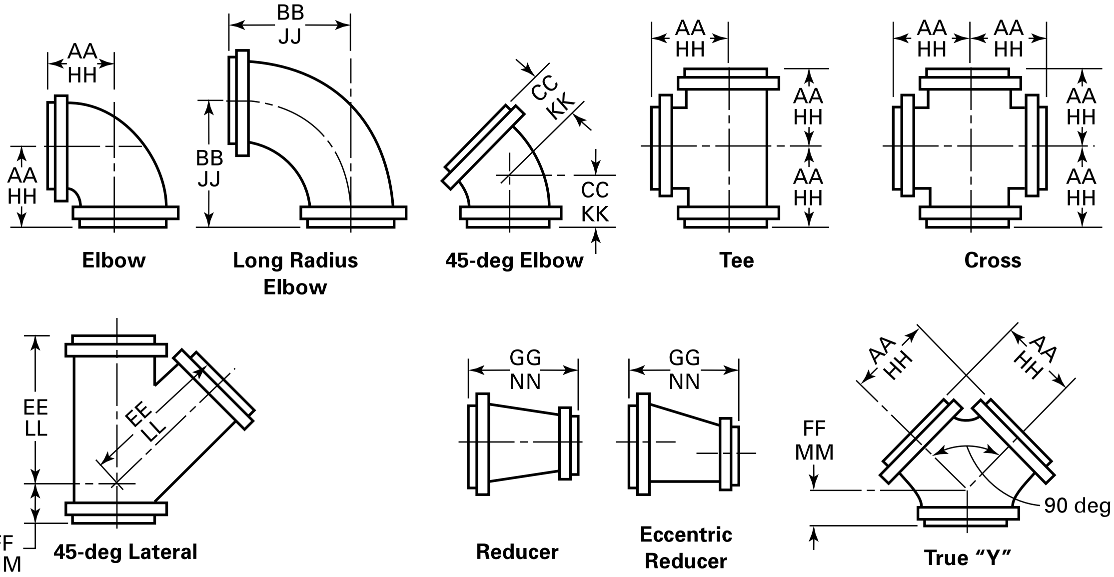

1	2	3	4	5	6	7	8	9	10	11	12
					1.5-mm Raised Face (4)						Ring Joint (4)
Nominal Pipe Size, NPS	Outside Diameter of Flange, *O*	Minimum Thickness of Flange, t_f (1)–(3)	Minimum Wall Thickness of Fitting, t_m	Inside Diameter of Fitting, *d*	Center-to-Contact Surface of Raised Face Elbow, Tee, Cross, and True "Y," AA	Center-to-Contact Surface of Raised Face Long Radius vElbow, BB	Center-to-Contact Surface of Raised Face 45-deg Elbow, CC	Long Center-to-Contact Surface of Raised Face Lateral, EE	Short Center-to-Contact Surface of Raised Face Lateral and True "Y," FF	Contact Surface-to-Contact Surface of Raised Face Reducer, GG (5)	Center-to-End Elbow, Tee, Cross, and True "Y," HH (6)
½	89	7.9	2.8	13	...	...	...	...	...	...	...
¾	99	8.6	3.0	19	...	...	...	...	...	...	...
1	108	9.7	4.1	25	89	127	44	146	44	114	95
1¼	117	11.2	4.8	32	95	140	51	159	44	114	102
1½	127	12.7	4.8	38	102	152	57	178	51	114	108
2	152	14.2	5.6	51	114	165	64	203	64	127	121
2½	178	15.7	5.6	64	127	178	76	241	64	140	133
3	190	17.5	5.6	76	140	197	76	254	76	152	146
3½	216	19.0	6.4	89	152	216	89	292	76	165	159
4	229	22.4	6.4	102	165	229	102	305	76	178	171
5	254	22.5	7.1	127	190	260	114	343	89	203	197
6	279	23.9	7.1	152	203	292	127	368	89	229	210
8	343	26.9	7.9	203	229	356	140	444	114	279	235
10	406	28.4	8.6	254	279	419	165	521	127	305	286
12	483	30.2	9.7	305	305	483	190	622	140	356	311
14	533	33.3	10.4	337	356	546	190	686	152	406	362
16	597	35.1	11.2	387	381	610	203	762	165	457	387

Table 9 Dimensions of Class 150 Flanged Fittings

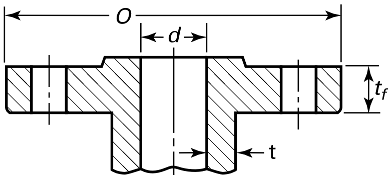

Flanged Fitting

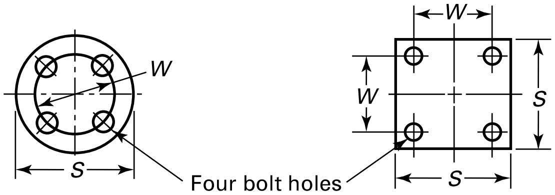

Round Base

Square Base

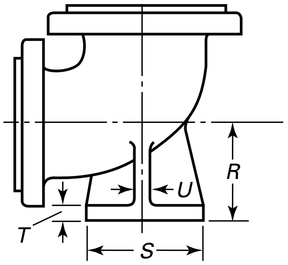

Base Elbow

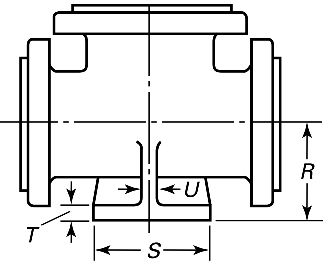

Base Tee

13	14	15	16	17	18	19	20	21	22	23	1
Ring Joint (4)									Base Drilling (11)		
Center-to-End Long Radius Elbow, *JJ* (6)	Center-to-End 45-deg Elbow, *KK* (6)	Long Center-to-End Lateral, *LL* (6)	Short Center-to-End Lateral and True "Y," *MM* (6)	End-to-End Reducer, *NN* (5), (6)	Center-to-Base, *R* (7)–(9)	Diameter of Round Base or Width of Square Base, *S* (7)	Thickness of Base, *T* (7)–(10)	Thickness of Ribs, *U* (7)	Bolt Circle or Bolt Spacing, *W*	Diameter of Drilled Holes	Nominal Pipe Size, NPS
...	...	...	...	...	...	...	...	...	...	...	1⁄2
...	...	...	...	...	...	...	...	...	...	...	3⁄4
133	51	152	51	...	...	...	...	...	...	...	1
146	57	165	51	...	...	...	...	...	...	...	1 1⁄4
159	64	184	57	...	...	...	...	...	...	...	1 1⁄2
171	70	210	70	...	105	117	13	13	88.9	5⁄8	2
184	83	248	70	...	114	117	13	13	88.9	5⁄8	2 1⁄2
203	83	260	83	...	124	127	14	14	98.6	5⁄8	3
222	95	298	83	...	133	127	14	14	98.6	5⁄8	3 1⁄2
235	108	311	83	...	140	152	16	16	120.6	3⁄4	4
267	121	349	95	...	159	178	18	18	139.7	3⁄4	5
298	133	375	95	...	178	178	18	18	139.7	3⁄4	6
362	146	451	121	...	213	229	24	24	190.5	3⁄4	8
425	171	527	133	...	248	229	24	24	190.5	3⁄4	10
489	197	629	146	...	286	279	25	25	241.3	7⁄8	12
552	197	692	159	...	318	279	25	25	241.3	7⁄8	14
616	210	768	171	...	349	279	25	25	241.3	7⁄8	16

Table 9 Dimensions of Class 150 Flanged Fittings (Cont'd)

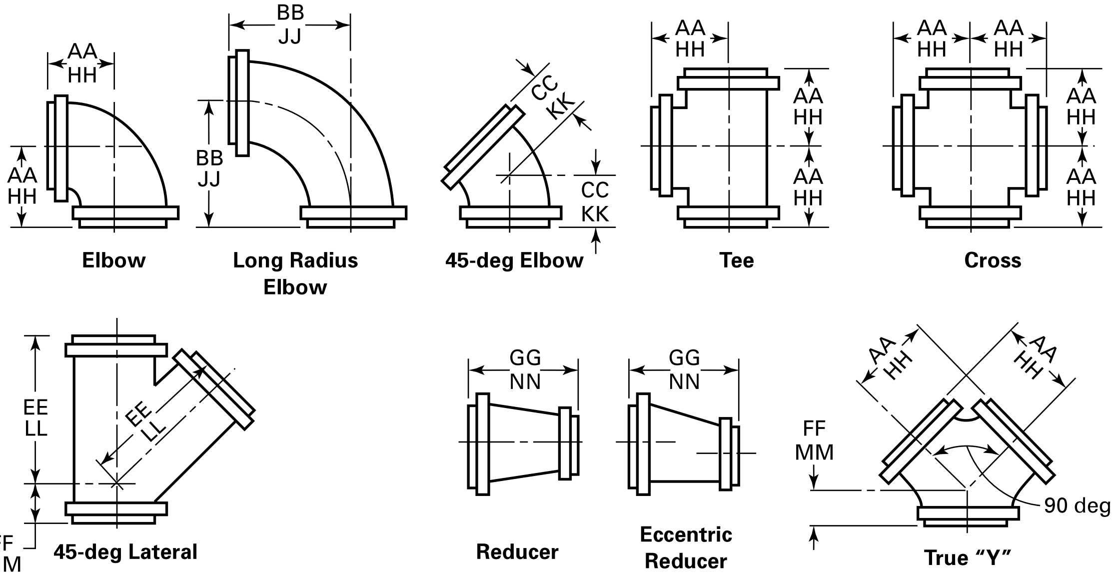

1	2	3	4	5	6	7	8	9	10	11	12
					1.5-mm Raised Face (4)						Ring Joint (4)
Nominal Pipe Size, NPS	Outside Diameter of Flange, O	Minimum Thickness of Flange, t_f (1)–(3)	Minimum Wall Thickness of Fitting, t_m	Inside Diameter of Fitting, d	Center-to-Contact Surface of Raised Face Elbow, Tee, Cross, and True "Y," AA	Center-to-Contact Surface of Raised Face Long Radius vElbow, BB	Center-to-Contact Surface of Raised Face 45-deg Elbow, CC	Long Center-to-Contact Surface of Raised Face Lateral, EE	Short Center-to-Contact Surface of Raised Face Lateral and True "Y," FF	Contact Surface-to-Contact Surface of Raised Face Reducer, GG (5)	Center-to-End Elbow, Tee, Cross, and True "Y," HH (6)
18	635	38.1	11.9	438	419	673	216	813	178	483	425
20	698	41.1	12.7	489	457	737	241	889	203	508	464
24	813	46.0	14.5	591	559	864	279	1029	229	610	565

Table 9 Dimensions of Class 150 Flanged Fittings (Cont'd)

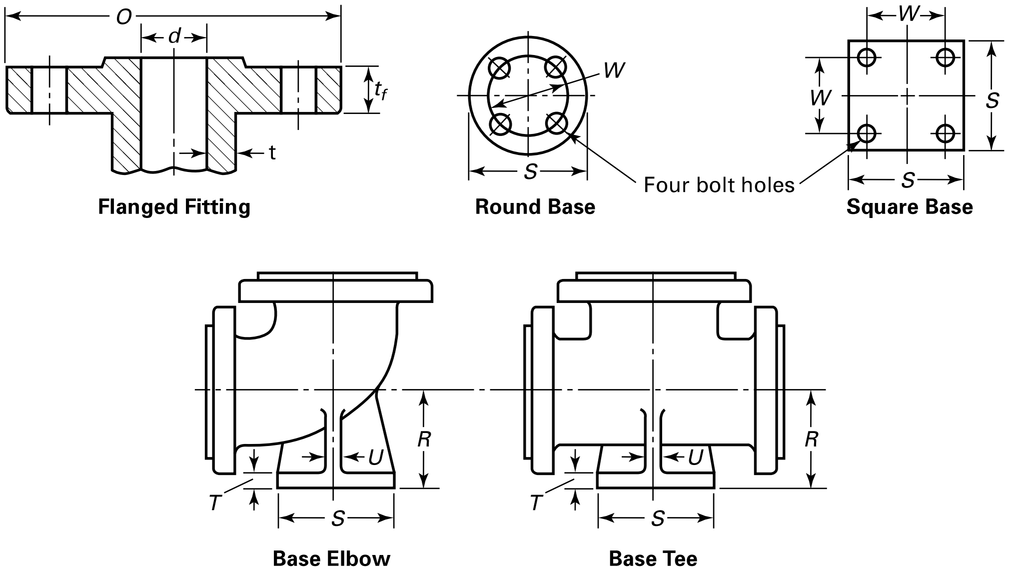

13	14	15	16	17	18	19	20	21	22	23	1
Ring Joint (4)									Base Drilling (11)		
Center-to-End Long Radius Elbow, *JJ* (6)	Center-to-End 45-deg Elbow, *KK* (6)	Long Center-to-End Lateral, *LL* (6)	Short Center-to-End Lateral and True "Y," *MM* (6)	End-to-End Reducer, *NN* (5), (6)	Center-to-Base, *R* (7)–(9)	Diameter of Round Base or Width of Square Base, *S* (7)	Thickness of Base, *T* (7)–(10)	Thickness of Ribs, *U* (7)	Bolt Circle or Bolt Spacing, *W*	Diameter of Drilled Holes	Nominal Pipe Size, NPS
679	222	819	184	...	381	343	28	28	298.4	7/8	18
743	248	895	210	...	406	343	28	28	298.4	7/8	20
870	286	1035	235	...	470	343	28	28	298.4	7/8	24

Table 9 Dimensions of Class 150 Flanged Fittings (Cont'd)

GENERAL NOTES:
(a) Dimensions are in millimeters.
(b) For tolerances, see section 7.
(c) For facings, see para. 6.4.
(d) For flange bolt holes, see para. 6.5 and Table 8.
(e) For spot facing, see para. 6.6.
(f) For intersecting centerlines, center-to-contact surface, and center-to-end dimensions of side outlet fittings, see para. 6.2.4.
(g) For center-to-contact surface and center-to-end dimensions of special degree elbows, see para. 6.2.5.
(h) For reinforcement of certain fittings, see para. 6.1.
(i) For drains, see para. 6.12.

NOTES:
(1) The thickness of flange minimum dimensions for loose flanges, Table 9 sizes NPS 3½ and smaller, are slightly heavier than for flanges on these fittings, which are reinforced by being cast integral with the body of fitting.
(2) These fittings may be supplied with a flat face flange. The flat face may be either the full t_f dimension thickness plus 1.5 mm or the t_f dimension thickness without the raised face height. See para. 6.3.2 for additional restrictions.
(3) The thickness of the flange dimension illustrated is for regularly furnished 1.5-mm raised face (except lapped); for thickness requirements of other facings, see Figure 6.
(4) For center-to-contact surface and center-to-end dimensioins of reducing fittings, see para. 6.2.3.
(5) For contact surface-to-contact surface and end-to-end dimensions of reducers and eccentric reducers, see para. 6.2.3.
(6) These dimensions apply to straight sizes only (see paras. 6.2.3 and 6.4.2.2). For center-to-end dimensions of reducing fittings or end-to-end dimensions of reducers, use center-to-contact surface or contact surface-to-contact surface dimensions of 1.5 mm raised face (flange edge) for largest opening, and add the proper height to provide for ring joint groove applying to each flange. See Table 5 for ring joint facing dimensions.
(7) The base dimensions apply to all straight and reducing sizes.
(8) For reducing fittings, the size and center-to-face dimension of base are determined by the size of the largest opening of fittings. In the case of reducing base elbows, orders shall specify whether the base shall be opposite the larger or smaller opening.
(9) Bases shall be plain faced unless otherwise specified, and the center-to-base dimension *R* shall be the finished dimension.
(10) Bases may be cast integral or attached as weldments at the option of the manufacturer.
(11) The bases of these fittings are intended for support in compression and are not to be used for anchors or supports in tension or shear.

TABLE STARTS ON NEXT PAGE

(20)

Table 9C Dimensions of Class 150 Flanged Fittings

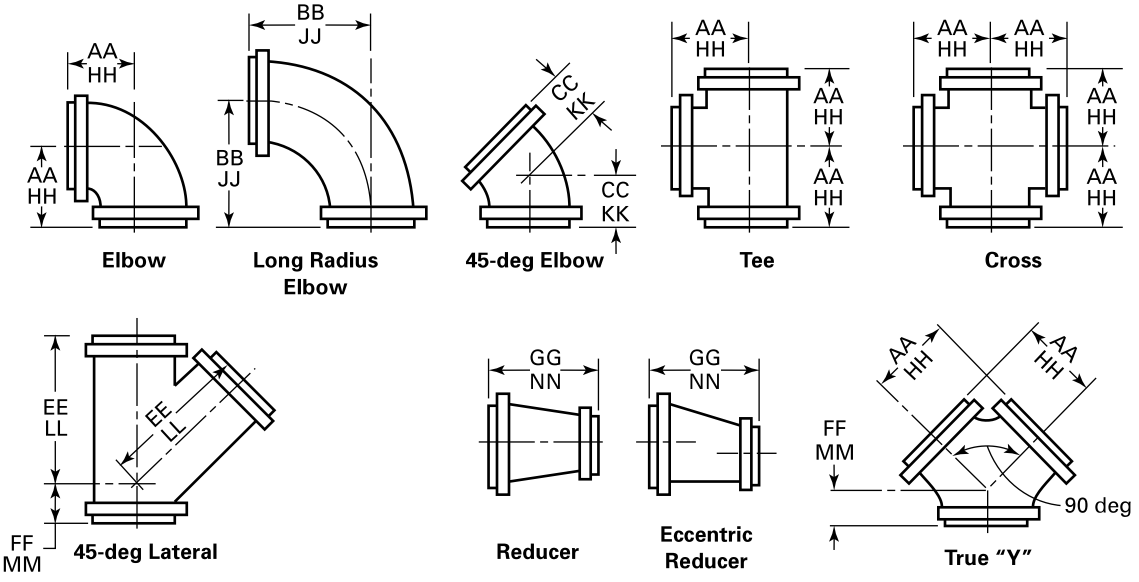

1	2	3	4	5	6	7	8	9	10	11	12
					0.06-in. Raised Face (Flange Edge) (4)						Ring Joint (4)
Nominal Pipe Size, NPS	Outside Diameter of Flange, *O*	Minimum Thickness of Flange, t_f (1)–(3)	Minimum Wall Thickness of Fitting, t_m	Inside Diameter of Fitting, *d*	Center-to-Contact Surface of Raised Face Elbow, Tee, Cross, and True "Y," *AA*	Center-to-Contact Surface of Raised Face Long Radius Elbow, *BB*	Center-to-Contact Surface of Raised Face 45-deg Elbow, *CC*	Long Center-to-Contact Surface of Raised Face Lateral, *EE*	Short Center-to-Contact Surface of Raised Face Lateral and True "Y," *FF*	Contact Surface-to-Contact Surface of Raised Face Reducer, *GG* (5)	Center-to-End Elbow Tee, Cross, and True "Y," *HH* (6)
½	3.50	0.31	0.11	0.50	...	...	...	...	...	...	...
¾	3.88	0.34	0.12	0.75	...	...	...	...	...	...	...
1	4.25	0.38	0.16	1.00	3.50	5.00	1.75	5.75	1.75	4.50	3.75
1¼	4.62	0.44	0.19	1.25	3.75	5.50	2.00	6.25	1.75	4.50	4.00
1½	5.00	0.50	0.19	1.50	4.00	6.00	2.25	7.00	2.00	4.50	4.25
2	6.00	0.56	0.22	2.00	4.50	6.50	2.50	8.00	2.50	5.00	4.75
2½	7.00	0.62	0.22	2.50	5.00	7.00	3.00	9.50	2.50	5.50	5.25
3	7.50	0.69	0.22	3.00	5.50	7.75	3.00	10.00	3.00	6.00	5.75
3½	8.50	0.75	0.25	3.50	6.00	8.50	3.50	11.50	3.00	6.50	6.25
4	9.00	0.88	0.25	4.00	6.50	9.00	4.00	12.00	3.00	7.00	6.75
5	10.00	0.88	0.28	5.00	7.50	10.25	4.50	13.50	3.50	8.00	7.75
6	11.00	0.94	0.28	6.00	8.00	11.50	5.00	14.50	3.50	9.00	8.25
8	13.50	1.06	0.31	8.00	9.00	14.00	5.50	17.50	4.50	11.00	9.25
10	16.00	1.12	0.34	10.00	11.00	16.50	6.50	20.50	5.00	12.00	11.25
12	19.00	1.19	0.38	12.00	12.00	19.00	7.50	24.50	5.50	14.00	12.25
14	21.00	1.31	0.41	13.25	14.00	21.50	7.50	27.00	6.00	16.00	14.25
16	23.50	1.38	0.44	15.25	15.00	24.00	8.00	30.00	6.50	18.00	15.25
18	25.00	1.50	0.47	17.25	16.50	26.50	8.50	32.00	7.00	19.00	16.75
20	27.50	1.62	0.50	19.25	18.00	29.00	9.50	35.00	8.00	20.00	18.25
24	32.00	1.81	0.57	23.25	22.00	34.00	11.00	40.50	9.00	24.00	22.25

Table 9C Dimensions of Class 150 Flanged Fittings

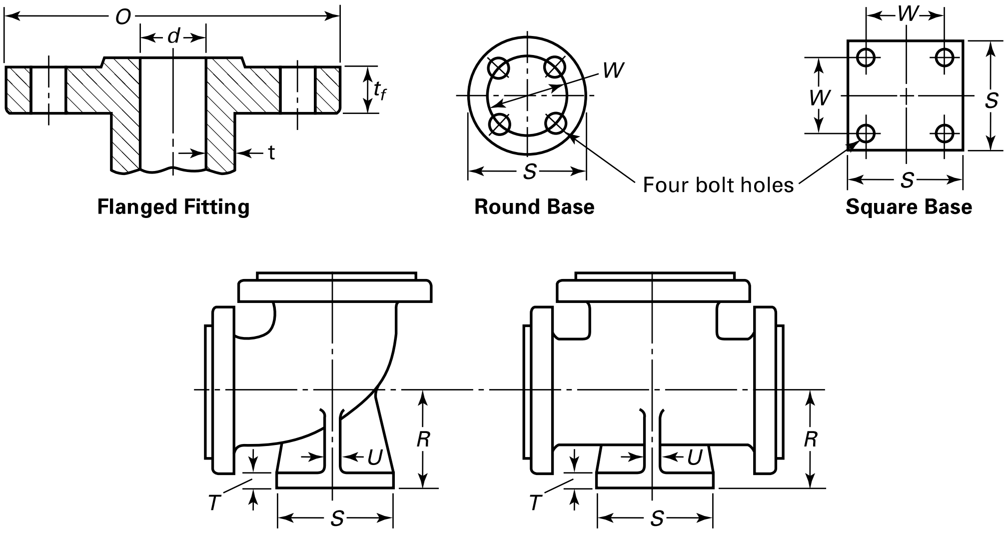

Flanged Fitting — Round Base — Square Base

Base Elbow — Base Tee

13	14	15	16	17	18	19	20	21	22	23	1
Ring Joint (4)									Base Drilling (11)		
Center-to-End Long Radius Elbow, *JJ* (6)	Center-to-End 45-deg Elbow, *KK* (6)	Long Center-to-End Lateral, *LL* (6)	Short Center-to-End Lateral and True "Y," *MM* (6)	End-to-End Reducer, *NN* (5), (6)	Center-to-Base, *R* (7)–(9)	Diameter of Round Base or Width of Square Base, *S* (7)	Thickness of Base, *T* (7)–(10)	Thickness of Ribs, *U* (7)	Bolt Circle or Bolt Spacing, *W*	Diameter of Drilled Holes	Nominal Pipe Size, NPS
...	...	...	...	...	...	...	...	...	...	...	1/2
...	...	...	...	...	...	...	...	...	...	...	3/4
5.25	2.00	6.00	2.00	...	...	...	...	...	...	...	1
5.75	2.25	6.50	2.00	...	...	...	...	...	...		1 1/4
6.25	2.50	7.25	2.25	...	...	...	...	...	...		1 1/2
6.75	2.75	8.25	2.75	...	4.12	4.62	0.50	0.50	3.50	5/8	2
7.25	3.25	9.75	2.75	...	4.50	4.62	0.50	0.50	3.50	5/8	2 1/2
8.00	3.25	10.25	3.25	...	4.88	5.00	0.56	0.56	3.88	5/8	3
8.75	3.75	11.75	3.25	...	5.25	5.00	0.56	0.56	3.88	5/8	3 1/2
9.25	4.25	12.25	3.25	...	5.50	6.00	0.62	0.62	4.75	3/4	4
10.50	4.75	13.75	3.75	...	6.25	7.00	0.69	0.65	5.50	3/4	5
11.75	5.25	14.75	3.75	...	7.00	7.00	0.69	0.65	5.50	3/4	6
14.25	5.75	17.75	4.75	...	8.38	9.00	0.94	0.94	7.50	3/4	8
16.75	6.75	20.75	5.25	...	9.75	9.00	0.94	0.94	7.50	3/4	10
19.25	7.75	24.75	5.75	...	11.25	11.00	1.00	1.00	9.50	7/8	12
21.75	7.75	27.25	6.25	...	12.50	11.00	1.00	1.00	9.50	7/8	14
24.25	8.25	30.25	6.75	...	13.75	11.00	1.00	1.00	9.50	7/8	16
26.75	8.75	32.25	7.25	...	15.00	13.50	1.12	1.12	11.75	7/8	18
29.25	9.75	35.25	8.25	...	16.00	13.50	1.12	1.12	11.75	7/8	20
34.25	11.25	40.75	9.25	...	18.50	13.50	1.12	1.12	11.75	7/8	24

Table 9C Dimensions of Class 150 Flanged Fittings (Cont'd)

GENERAL NOTE:
(a) Dimensions are in inches.
(b) For tolerances, see section 7.
(c) For facings, see para. 6.4.
(d) For flange bolt holes, see para. 6.5 and Table 7C.
(e) For spot facing, see para. 6.6.
(f) For intersecting centerlines, center-to-contact surface, and center-to-end dimensions of side outlet fittings, see para. 6.2.4.
(g) For center-to-contact surface and center-to-end dimensions of special degree elbows, see para. 6.2.5.
(h) For reinforcement of certain fittings, see para. 6.1.
(i) For drains, see para. 6.12.

NOTES:
(1) The thickness of flange minimum dimensions for loose flanges, Table 9C, sizes NPS 3$\frac{1}{2}$ and smaller, are slightly heavier than for flanges on these fittings, which are reinforced by being cast integral with the body of the fitting.
(2) These fittings may be supplied with a flat face flange. The flat face may be either the full t_f dimension thickness plus 0.06 in. or the t_f dimension thickness without the raised face height. See para. 6.3.2 for additional restrictions.
(3) The thickness of the flange dimension illustrated is for regularly furnished 0.06-in. raised face (except lapped); for thickness requirements of other facings, see Figure 6.
(4) For center-to-contact surface and center-to-end dimensions of reducing fittings, see para. 6.2.3.
(5) For contact surface-to-contact surface and end-to-end dimensions of reducers and eccentric reducers, see para. 6.2.3.
(6) These dimensions apply to straight sizes only (see paras. 6.2.3 and 6.4.2.2). For center-to-end dimensions of reducing fittings or end-to-end dimensions of reducers, use center-to-contact surface or contact surface-to-contact surface dimensions of 0.06-in. raised face (flange edge) for the largest opening, and add the proper height to provide for ring joint groove applying to each flange. See Table 5C for ring joint facing dimensions.
(7) The base dimensions apply to all straight and reducing sizes.
(8) For reducing fittings, the size, and center-to-face dimension of base are determined by the size of the largest opening of fittings. In the case of reducing base elbows, orders shall specify whether the base shall be opposite the larger or smaller opening.
(9) Bases shall be plain faced, unless otherwise specified, and the center-to-base dimension R shall be the finished dimension.
(10) Bases may be cast integral or attached as weldments at the option of the manufacturer.
(11) The bases of these fittings are intended for support in compression and are not to be used for anchors or supports in tension or shear.

Table 10 Templates for Drilling Class 300 Pipe Flanges and Flanged Fittings (20)

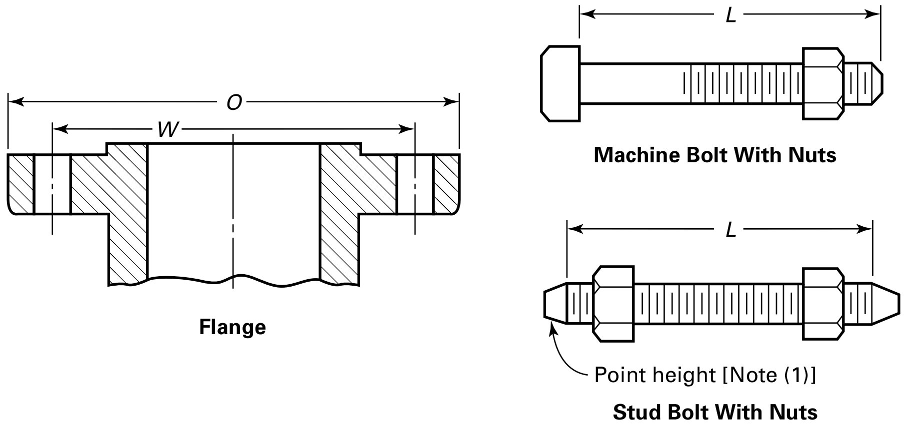

1	2	3	4	5	6	7	8	9
		Drilling (2), (3)				Length of Bolts, L (4)		
						Stud Bolts (1)		Machine Bolts
Nominal Pipe Size, NPS	Outside Diameter of Flange, *O*	Diameter of Bolt Circle, *W*	Diameter of Bolt Holes, in.	Number of Bolts	Diameter of Bolts, in.	1.5-mm Raised Face	Ring Joint	1.5-mm Raised Face
1/2	95	66.5	5/8	4	1/2	65	75	55
3/4	117	82.6	3/4	4	5/8	75	90	65
1	124	88.9	3/4	4	5/8	75	90	65
1 1/4	133	98.6	3/4	4	5/8	85	95	70
1 1/2	155	114.3	7/8	4	3/4	90	100	75
2	165	127.0	3/4	8	5/8	90	100	75
2 1/2	190	149.4	7/8	8	3/4	100	115	85
3	210	168.1	7/8	8	3/4	110	120	90
3 1/2	229	184.2	7/8	8	3/4	110	125	95
4	254	200.2	7/8	8	3/4	115	125	95
5	279	235.0	7/8	8	3/4	120	135	110
6	318	269.7	7/8	12	3/4	120	140	110
8	381	330.2	1	12	7/8	140	150	120
10	444	387.4	1 1/8	16	1	160	170	140
12	521	450.8	1 1/4	16	1 1/8	170	185	145
14	584	514.4	1 1/4	20	1 1/8	180	190	160
16	648	571.5	1 3/8	20	1 1/4	190	205	165
18	711	628.6	1 3/8	24	1 1/4	195	210	170
20	775	685.8	1 3/8	24	1 1/4	205	220	185
22	838	743.0	1 5/8	24	1 1/2	230	255	205
24	914	812.8	1 5/8	24	1 1/2	230	255	205

GENERAL NOTES:
(a) Dimensions are in millimeters, except for diameters of bolts and bolt holes, which are in inches.
(b) For other dimensions, see Tables 11 and 12.

NOTES:
(1) Length of stud bolt does not include the height of the points (see para. 6.10.2).
(2) For flange bolt holes, see para. 6.5.
(3) For spot facing, see para 6.6.
(4) Bolt lengths not shown in the table may be determined in accordance with Nonmandatory Appendix C (see para. 6.10.2).

Table 10C Templates for Drilling Class 300 Pipe Flanges and Flanged Fittings

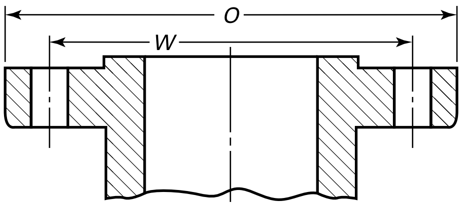

Flange

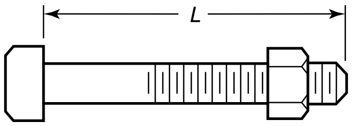

Machine Bolt With Nuts

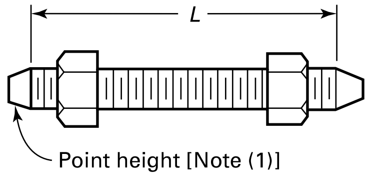

Stud Bolt With Nuts

1	2	3	4	5	6	7	8	9
		Drilling (2), (3)				Length of Bolts, *L* (4)		
						Stud Bolts (1)		Machine Bolts
Nominal Pipe Size	Outside Diameter of Flange, *O*	Diameter of Bolt Circle, *W*	Diameter of Bolt Holes	Number of Bolts	Diameter of Bolts	Raised Face 0.06 in.	Ring Joint	Raised Face 0.06 in.
$\frac{1}{2}$	3.75	2.62	$\frac{5}{8}$	4	$\frac{1}{2}$	2.50	3.00	2.25
$\frac{3}{4}$	4.62	3.25	$\frac{3}{4}$	4	$\frac{5}{8}$	3.00	3.50	2.50
1	4.88	3.50	$\frac{3}{4}$	4	$\frac{5}{8}$	3.00	3.50	2.50
$1\frac{1}{4}$	5.25	3.88	$\frac{3}{4}$	4	$\frac{5}{8}$	3.25	3.75	2.75
$1\frac{1}{2}$	6.12	4.50	$\frac{7}{8}$	4	$\frac{3}{4}$	3.50	4.00	3.00
2	6.50	5.00	$\frac{3}{4}$	8	$\frac{5}{8}$	3.50	4.00	3.00
$2\frac{1}{2}$	7.50	5.88	$\frac{7}{8}$	8	$\frac{3}{4}$	4.00	4.50	3.25
3	8.25	6.62	$\frac{7}{8}$	8	$\frac{3}{4}$	4.25	4.75	3.50
$3\frac{1}{2}$	9.00	7.25	$\frac{7}{8}$	8	$\frac{3}{4}$	4.25	5.00	3.75
4	10.00	7.88	$\frac{7}{8}$	8	$\frac{3}{4}$	4.50	5.00	3.75
5	11.00	9.25	$\frac{7}{8}$	8	$\frac{3}{4}$	4.75	5.25	4.25
6	12.50	10.62	$\frac{7}{8}$	12	$\frac{3}{4}$	4.75	5.50	4.25
8	15.00	13.00	1	12	$\frac{7}{8}$	5.50	6.00	4.75
10	17.50	15.25	$1\frac{1}{8}$	16	1	6.25	6.75	5.50
12	20.50	17.75	$1\frac{1}{4}$	16	$1\frac{1}{8}$	6.75	7.25	5.75
14	23.00	20.25	$1\frac{1}{4}$	20	$1\frac{1}{8}$	7.00	7.50	6.25
16	25.50	22.50	$1\frac{3}{8}$	20	$1\frac{1}{4}$	7.50	8.00	6.50
18	28.00	24.75	$1\frac{3}{8}$	24	$1\frac{1}{4}$	7.75	8.25	6.75
20	30.50	27.00	$1\frac{3}{8}$	24	$1\frac{1}{4}$	8.00	8.75	7.25
22	33.00	29.25	$1\frac{5}{8}$	24	$1\frac{1}{2}$	9.00	10.00	8.00
24	36.00	32.00	$1\frac{5}{8}$	24	$1\frac{1}{2}$	9.00	10.00	8.00

GENERAL NOTES:

(a) Dimensions are in inches.

(b) For other dimensions see, Tables 11C and 12C.

NOTES:

(1) The length of the stud bolt does not include the height of the points (see para. 6.10.2).

(2) For flange bolt holes, see para. 6.5.

(3) For spot facing, see para. 6.6.

(4) Bolt lengths not shown in the table may be determined in accordance with Nonmandatory Appendix C (see para. 6.10.2).

Table 11 Dimensions of Class 300 Flanges

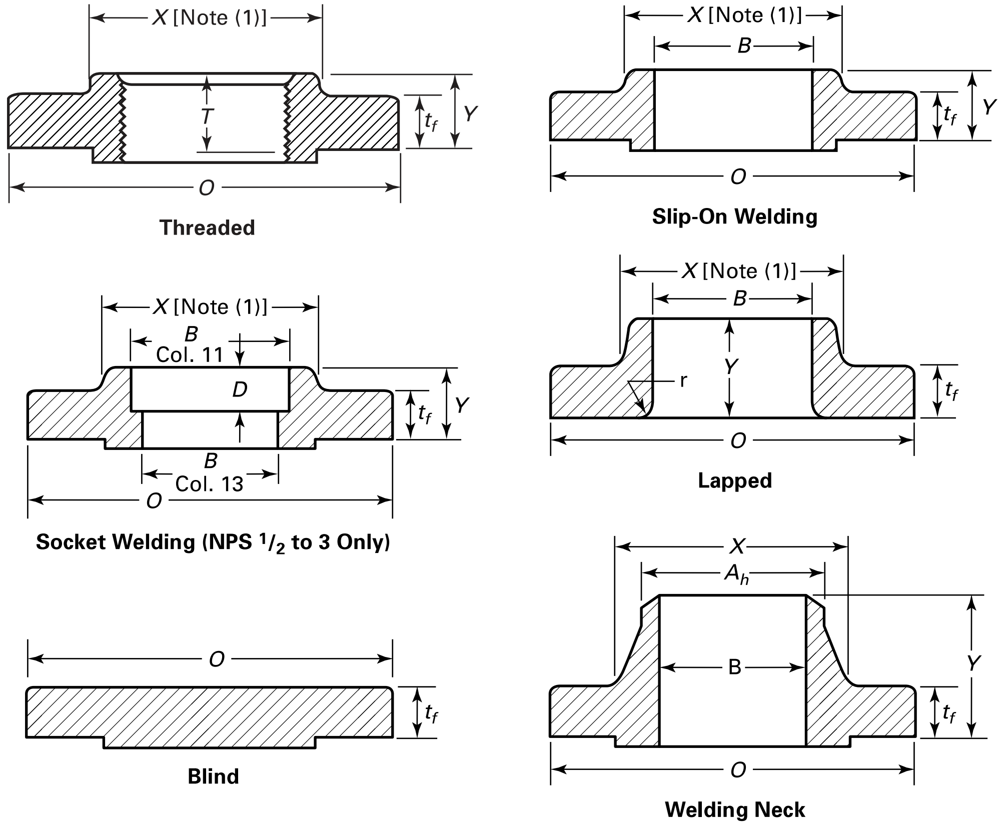

1	2	3	4	5	6	7	8	9	10	11	12	13	14	15	16
						Length Through Hub				Bore			Corner Radius of Bore of Lapped Flange and Pipe, *r*		
Nominal Pipe Size NPS	Outside Diamter of Flange, *O*	Minimum Thickness of Flange, t_f (2)–(4)	Minimum Thickness Lap Joint, t_f	Diameter of Hub, *X*	Hub Diameter Beginning of Chamfer Welding Neck, A_h (4)	Threaded/ Slip-On/ Socket Welding, *Y*	Lapped, *Y*	Welding Neck, *Y*	Minimum Thread Length Threaded, *T* (5)	Minimum Slip-On/ Socket Welding, *B*	Minimum Lapped, *B*	Welding Neck/ Socket Welding, *B* (6)		Minimum Counter-bore Threaded Flange, *Q*	Depth of Socket, *D*
1/2	95	12.7	14.2	38	21.3	21	22	51	16	22.4	22.9	15.7	3	23.6	10
3/4	117	14.2	15.7	48	26.7	24	25	56	16	27.7	28.2	20.8	3	29.0	11
1	124	15.7	17.5	54	33.5	25	27	60	18	34.5	35.1	26.7	3	35.8	13
1 1/4	133	17.5	19.0	64	42.2	25	27	64	21	43.2	43.7	35.1	5	44.4	14
1 1/2	155	19.0	20.6	70	48.3	29	30	67	22	49.5	50.0	40.9	6	50.3	16

Table 11 Dimensions of Class 300 Flanges (Cont'd)

1	2	3	4	5	6	7	8	9	10	11	12	13	14	15	16
						Length Through Hub				Bore					
Nominal Pipe Size NPS	Outside Diamter of Flange, *O*	Minimum Thickness of Flange, t_f (2)–(4)	Minimum Thickness Lap Joint, t_f	Diameter of Hub, *X*	Hub Diameter Beginning of Chamfer Welding Neck, A_h (4)	Threaded/ Slip-On/ Socket Welding, *Y*	Lapped, *Y*	Welding Neck, *Y*	Minimum Thread Length Threaded, *T* (5)	Minimum Slip-On/ Socket Welding, *B*	Minimum Lapped, *B*	Welding Neck/ Socket Welding, *B* (6)	Corner Radius of Bore of Lapped Flange and Pipe, *r*	Minimum Counter-bore Threaded Flange, *Q*	Depth of Socket, *D*
2	165	20.6	22.4	84	60.5	32	33	68	28	62.0	62.5	52.6	8	63.5	17
2½	190	23.9	25.4	100	73.2	37	38	75	32	74.7	75.4	62.7	8	76.2	19
3	210	26.9	28.4	117	88.9	41	43	78	32	90.7	91.4	78.0	10	92.2	21
3½	229	28.4	30.2	133	101.6	43	44	80	37	103.4	104.1	90.2	10	104.9	...
4	254	30.2	31.8	146	114.3	46	48	84	37	116.1	116.8	102.4	11	117.6	...
5	279	33.3	35.1	178	141.2	49	51	97	43	143.8	144.5	128.3	11	144.5	...
6	318	35.1	36.6	206	168.4	51	52	97	46	170.7	171.4	154.2	13	171.4	...
8	381	39.6	41.1	260	219.2	60	62	110	51	221.5	222.2	202.7	13	222.2	...
10	444	46.0	47.8	321	273.0	65	95	116	56	276.4	277.4	254.5	13	276.4	...
12	521	49.3	50.8	375	323.8	72	102	129	60	327.2	328.2	304.8	13	328.7	...
14	584	52.3	53.8	425	355.6	75	111	141	64	359.2	360.2	(7)	13	360.4	...
16	648	55.6	57.2	483	406.4	81	121	145	68	410.5	411.2	(7)	13	411.2	...
18	711	58.7	60.5	533	457.2	87	130	157	70	461.8	462.3	(7)	13	462.0	...
20	775	62.0	63.5	587	508.0	94	140	161	73	513.1	514.4	(7)	13	512.8	...
22	838	65.0	66.5	641	558.8	100	145	164	...	564.4	565.2	(7)	13	...	...
24	914	68.3	68.8	702	609.6	105	152	167	83	616.0	616.0	(7)	13	614.4	...

GENERAL NOTES:

(a) Dimensions are in millimeters.

(b) For tolerances, see section 7.

(c) For facings, see para. 6.4.

(d) For flange bolt holes, see para. 6.5 and Table 10.

(e) For spot facing, see para. 6.6.

(f) For reducing threaded and slip-on flanges, see Table 6.

(g) Blind flanges may be made with or without hubs at the manufacturer's option.

(h) For reducing welding neck flanges, see para. 6.8.

NOTES:

(1) This dimension is for the large end of the hub, which may be straight or tapered. Taper shall not exceed 7 deg on threaded, slip-on, socket-welding, and lapped flanges. This dimension is defined as the diameter at the intersection between the hub taper and back face of the flange.

(2) These flanges may be supplied with a flat face. The flat face may be either the full t_f dimension thickness plus 1.5 mm or the t_f dimension thickness without the raised face height. See para. 6.3.2 for additional restrictions.

(3) The flange dimensions illustrated are for regularly furnished 1.5-mm raised face (except lapped); for requirements of other facings, see Figure 6.

Table 11 Dimensions of Class 300 Flanges (Cont'd)

NOTES: (Cont'd)

(4) For welding end bevel, see para. 6.7.

(5) For thread of threaded flanges, see para. 6.9.

(6) Dimensions in Column 13 correspond to the inside diameters of pipe as given in ASME B36.10M for standard wall pipe. Standard wall dimensions are the same as Schedule 40 in sizes NPS 10 and smaller. Tolerances in para. 7.5.2 apply. These bore sizes are furnished unless otherwise specified by the purchaser.

(7) To be specified by the purchaser.

Table 11C Dimensions of Class 300 Flanges

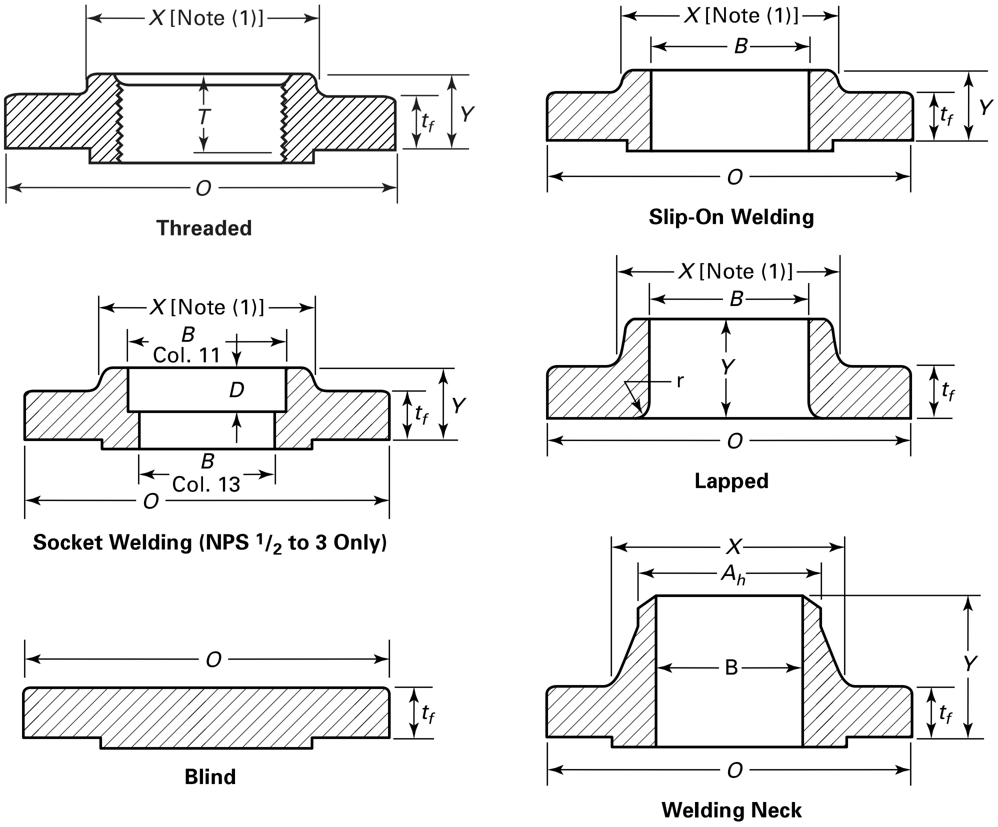

1	2	3	4	5	6	7	8	9	10	11	12	13	14	15	16
						Length Through Hub				Bore					
Nominal Pipe Size	Outside Diamter of Flange, *O*	Minimum Thickness of Flange, t_f (2)–(4)	Thickness of Lap Joint, t_f	Diameter of Hub, *X*	Diameter Beginning of Chamfer Welding Neck, A_h (4)	Threaded Slip-On Socket Welding, *Y*	Lapped, *Y*	Welding Neck, *Y*	Minimum Thread Length Threaded, *T* (5)	Minimum Slip-On Socket Welding, *B*	Minimum Lapped, *B*	Welding Neck/ Socket Welding, *B* (6)	Corner Bore Radius of Lapped Flange and Pipe, *r*	Minimum Counter-bore Threaded Flange, *Q*	Depth of Socket, *D*
½	3.75	0.50	0.56	1.50	0.84	0.81	0.88	2.00	0.62	0.88	0.90	0.62	0.12	0.93	0.38
¾	4.62	0.56	0.62	1.88	1.05	0.94	1.00	2.19	0.62	1.09	1.11	0.82	0.12	1.14	0.44
1	4.88	0.62	0.69	2.12	1.32	1.00	1.06	2.38	0.69	1.36	1.38	1.05	0.12	1.41	0.50
1¼	5.25	0.69	0.75	2.50	1.66	1.00	1.06	2.50	0.81	1.70	1.72	1.38	0.19	1.75	0.56
1½	6.12	0.75	0.81	2.75	1.90	1.13	1.19	2.63	0.88	1.95	1.97	1.61	0.25	1.98	0.62

Table 11C Dimensions of Class 300 Flanges (Cont'd)

1	2	3	4	5	6	7	8	9	10	11	12	13	14	15	16
						Length Through Hub				Bore					
Nominal Pipe Size	Outside Diamter of Flange, *O*	Minimum Thickness of Flange, t_f (2)–(4)	Thickness of Lap Joint, t_f	Diameter of Hub, *X*	Diameter Beginning of Chamfer Welding Neck, A_h (4)	Threaded Slip-On Socket Welding, *Y*	Lapped, *Y*	Welding Neck, *Y*	Minimum Thread Length Threaded, *T* (5)	Minimum Slip-On Socket Welding, *B*	Minimum Lapped, *B*	Welding Neck/ Socket Welding, *B* (6)	Corner Bore Radius of Lapped Flange and Pipe, *r*	Minimum Counter-bore Threaded Flange, *Q*	Depth of Socket, *D*
2	6.50	0.81	0.88	3.31	2.38	1.25	1.31	2.69	1.12	2.44	2.46	2.07	0.31	2.50	0.69
2½	7.50	0.94	1.00	3.94	2.88	1.44	1.50	2.94	1.25	2.94	2.97	2.47	0.31	3.00	0.75
3	8.25	1.06	1.12	4.62	3.50	1.63	1.69	3.06	1.25	3.57	3.60	3.07	0.38	3.63	0.81
3½	9.00	1.12	1.19	5.25	4.00	1.69	1.75	3.13	1.44	4.07	4.10	3.55	0.38	4.13	...
4	10.00	1.19	1.25	5.75	4.50	1.82	1.88	3.32	1.44	4.57	4.60	4.03	0.44	4.63	...
5	11.00	1.31	1.38	7.00	5.56	1.94	2.00	3.82	1.69	5.66	5.69	5.05	0.44	5.69	...
6	12.50	1.38	1.44	8.12	6.63	2.00	2.06	3.82	1.81	6.72	6.75	6.07	0.50	6.75	...
8	15.00	1.56	1.62	10.25	8.63	2.38	2.44	4.32	2.00	8.72	8.75	7.98	0.50	8.75	...
10	17.50	1.81	1.88	12.62	10.75	2.56	3.75	4.56	2.19	10.88	10.92	10.02	0.50	10.88	...
12	20.50	1.94	2.00	14.75	12.75	2.82	4.00	5.06	2.38	12.88	12.92	12.00	0.50	12.94	...
14	23.00	2.06	2.12	16.75	14.00	2.94	4.38	5.56	2.50	14.14	14.18	(7)	0.50	14.19	...
16	25.50	2.19	2.25	19.00	16.00	3.19	4.75	5.69	2.69	16.16	16.19	(7)	0.50	16.19	...
18	28.00	2.31	2.38	21.00	18.00	3.44	5.12	6.19	2.75	18.18	18.20	(7)	0.50	18.19	...
20	30.50	2.44	2.50	23.12	20.00	3.69	5.50	6.32	2.88	20.20	20.25	(7)	0.50	20.19	...
22	33.00	2.56	2.62	25.25	22.00	3.94	5.69	6.44	...	22.22	22.25	(7)	0.50	...	...
24	36.00	2.69	2.75	27.62	24.00	4.13	6.00	6.56	3.25	24.25	24.25	(7)	0.50	24.19	...

GENERAL NOTES:

(a) Dimensions are in inches.

(b) For tolerances, see section 7.

(c) For facings, see para. 6.4.

(d) For flange bolt holes, see para. 6.5 and Table 10C.

(e) For spot facing, see para. 6.6.

(f) For reducing threaded and slip-on flanges, see Table 6C.

(g) Blind flanges may be made with or without hubs at the manufacturer's option.

(h) For reducing welding neck flanges, see para. 6.8.

NOTES:

(1) This dimension is for the large end of the hub, which may be straight or tapered. Taper shall not exceed 7 deg on threaded, slip-on, socket-welding, and lapped flanges. This dimension is defined as the diameter at the intersection between the hub taper and back face of the flange.

(2) These flanges may be supplied with a flat face. The flat face may be either the full t_f dimension thickness plus 0.06 in. or the t_f dimension thickness without the raised face height. See para. 6.3.2 for additional restrictions.

(3) The flange dimensions illustrated are for regularly furnished 0.06-in. raised face (except lapped); for requirements of other facings, see Figure 6.

(4) For welding end bevel, see para. 6.7.

Table 11C Dimensions of Class 300 Flanges (Cont'd)

NOTES: (Cont'd)

(5) For thread of threaded flanges, see para. 6.9.

(6) Dimensions in Column 13 correspond to the inside diameters of pipe as given in ASME B36.10M for standard wall pipe. Standard wall dimensions are the same as Schedule 40 in sizes NPS 10 and smaller. Tolerances in para. 7.5.2 apply. These bore sizes are furnished unless otherwise specified by the purchaser.

(7) To be specified by the purchaser.

TABLE STARTS ON NEXT PAGE

(20)

Table 12 Dimensions of Class 300 Flanged Fittings

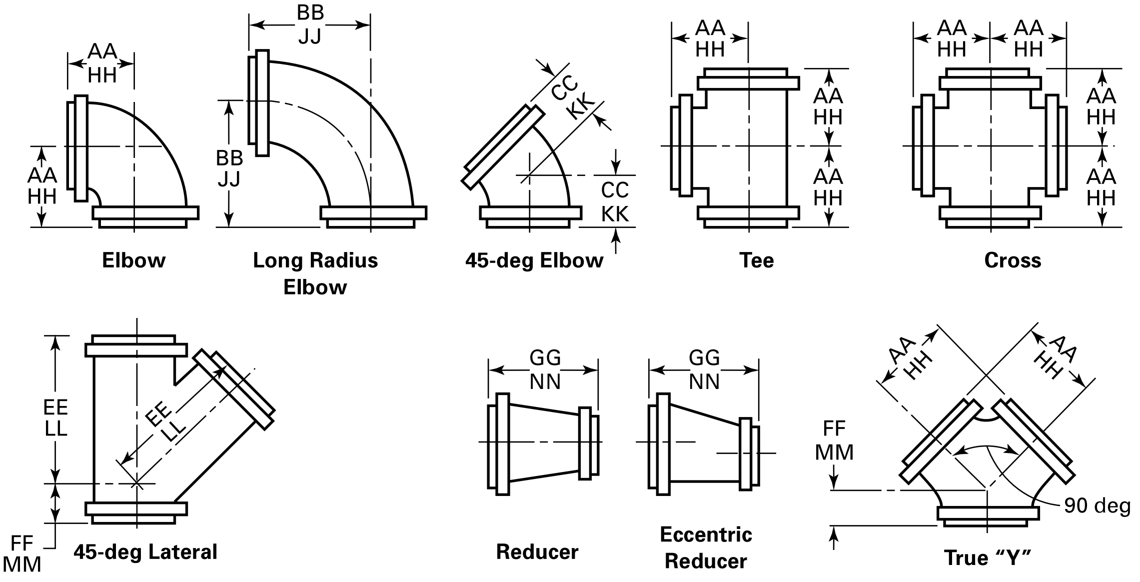

1	2	3	4	5	6	7	8	9	10	11	12
					1.5-mm Raised Face (Flange Edge) (4)						Ring Joint (4)
Nominal Pipe Size, NPS	Outside Diameter of Flange, *O*	Minimum Thickness of Flange, t_f (1)–(4)	Minimum Wall Thickness of Fitting, t_m	Inside Diameter of Fitting, *d*	Center-to-Contact Surface of Raised Face Elbow, Tee, Cross, and True "Y," AA	Center-to-Contact Surface of Raised Face Long Radius Elbow, *BB*	Center-to-Contact Surface of Raised Face 45-deg Elbow, *CC*	Long Center-to-Contact Surface of Raised Face Lateral, *EE*	Short Center-to-Contact Surface of Raised Face Lateral and True "Y," *FF*	Contact Surface-to-Contact Surface of Raised Face Reducer, *GG* (5)	Center-to-End Elbow, Tee, Cross, and True "Y," *HH* (6)
1	124	15.7	4.8	25	102	127	57	165	51	114	108
1¼	133	17.5	4.8	32	108	140	64	184	57	114	114
1½	155	19.0	4.8	38	114	152	70	216	64	114	121
2	165	20.6	6.4	51	127	165	76	229	64	127	135
2½	190	23.9	6.4	64	140	178	89	267	64	140	148
3	210	26.9	7.1	76	152	197	89	279	76	152	160
3½	229	28.4	7.4	89	165	216	102	318	76	165	173
4	254	30.2	7.9	102	178	229	114	343	76	178	186
5	279	33.3	9.7	127	203	260	127	381	89	203	211
6	318	35.1	9.7	152	216	292	140	444	102	229	224
8	381	39.6	11.2	203	254	356	152	521	127	279	262
10	444	46.0	12.7	254	292	419	178	610	140	305	300
12	521	49.3	14.2	305	330	483	203	698	152	356	338
14	584	52.3	15.7	337	381	546	216	787	165	406	389
16	648	55.6	17.5	387	419	610	241	876	190	457	427
18	711	58.7	19.0	432	457	673	254	952	203	483	465
20	775	62.0	20.6	483	495	737	267	1029	216	508	505
24	914	68.3	23.9	584	572	864	305	1206	254	610	583

Table 12 Dimensions of Class 300 Flanged Fittings

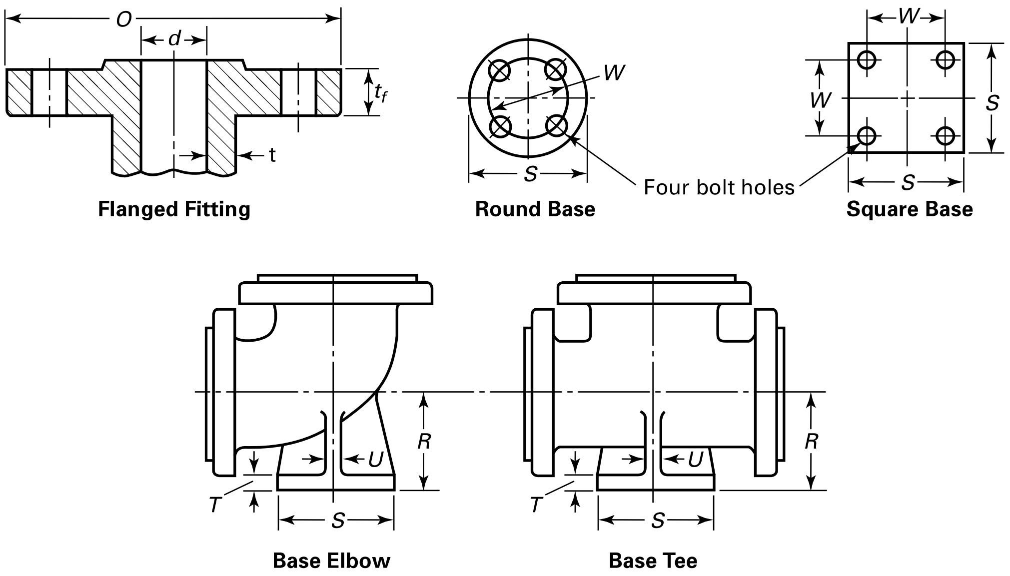

13	14	15	16	17	18	19	20	21	22	23	1
Ring Joint (5)								Base Drilling (11)			
Center-to-End Long Radius Elbow, *JJ* (7)	Center-to-End 45-deg Elbow, *KK* (7)	Long Center-to-End Lateral, *LL* (7)	Short Center-to-End Lateral and True "Y," *MM* (7)	End-to-End Reducer, *NN*	Center-to-Base, *R* (7)–(9)	Diameter of Round Base or Width of Square Base, *S* (7)	Thickness of Base, *T* (7)–(10)	Thickness of Ribs, *U* (7)	Bolt Circle or Bolt Spacing, *W*	Diameter of Drilled Holes	Nominal Pipe Size, NPS
133	64	171	57	...	...	...	...	...	. . .	...	1
146	70	191	64	...	...	...	...	...	. . .	...	$1\frac{1}{4}$
159	76	222	70	...	...	...	...	...	. . .	...	$1\frac{1}{2}$
173	84	236	71	...	114	133	19	13	98.6	$\frac{3}{4}$	2
186	97	275	71	...	121	133	19	13	98.6	$\frac{3}{4}$	$2\frac{1}{2}$
205	97	287	84	...	133	155	21	16	114.3	$\frac{7}{8}$	3
224	109	325	84	...	143	155	21	16	114.3	$\frac{7}{8}$	$3\frac{1}{2}$
236	124	351	84	...	152	165	22	16	127.0	$\frac{3}{4}$	4
268	135	389	97	...	171	190	25	19	149.4	$\frac{7}{8}$	5
300	148	452	109	...	190	190	25	19	149.4	$\frac{7}{8}$	6
363	160	529	135	...	229	254	32	22	200.2	$\frac{7}{8}$	8
427	186	617	148	...	267	254	32	22	200.2	$\frac{7}{8}$	10
490	211	706	160	...	305	318	37	25	269.7	$\frac{7}{8}$	12
554	224	795	173	...	343	318	37	25	269.7	$\frac{7}{8}$	14
617	249	884	198	...	375	318	37	28	269.7	$\frac{7}{8}$	16
681	262	960	211	...	413	381	41	28	330.2	1	18
746	276	1038	226	...	454	381	41	32	330.2	1	20
875	316	1218	265	...	527	444	48	32	387.4	$1\frac{1}{8}$	24

Table 12 Dimensions of Class 300 Flanged Fittings (Cont'd)

GENERAL NOTES:
(a) Dimensions are in millimeters.
(b) For tolerances, see section 7.
(c) For facings, see para. 6.4.
(d) For flange bolt holes, see para. 6.5 and Table 8.
(e) For spot facing, see para. 6.6
(f) For intersecting centerlines, center-to-contact surface, and center-to-end dimensions of side outlet fittings, see para. 6.2.4.
(g) For center-to-contact surface and center-to-end dimensions of special degree elbows, see para. 6.2.5.
(h) For reinforcement of certain fittings, see para. 6.1.1.
(i) For drains, see para. 6.12.

NOTES:
(1) These fittings may be supplied with a flat face flange. The flat face may be either the full t_f dimension thickness plus 1.5 mm or the t_f dimension thickness without the raised face height. See para. 6.3.2 for additional restrictions.
(2) The thickness of the flange dimension illustrated is for regularly furnished 1.5-mm raised face (except lapped); for thickness requirements of other facings, see Figure 6.
(3) The thickness of flange minimum dimensions for loose flanges, Table 9, size NPS 3½ and smaller, are slightly heavier than for flanges on these fittings that are reinforced by being cast integral with the body of fitting.
(4) For center-to-contact surface and center-to-end dimensions of reducing fittings, see para. 6.2.3.
(5) For contact surface-to-contact surface and end-to-end dimensions of reducers and eccentric reducers, see para. 6.2.3.
(6) These dimensions apply to straight sizes only (see paras. 6.2.3 and 6.4.2.2). For center-to-end dimensions of reducing fittings or end-to-end dimensions of reducers, use center-to-contact surface or contact surface-to-contact surface dimensions of 1.5-mm raised face (flange edge) for the largest opening, and add the proper height to provide for the ring joint groove applying to each flange. See Table 5 for ring joint facing dimensions.
(7) The base dimensions apply to all straight and reducing sizes.
(8) For reducing fittings, the size and center-to-face dimension of base are determined by the size of the largest opening of fittings. In the case of reducing base elbows, orders shall specify whether the base shall be opposite the larger or smaller opening.
(9) Bases shall be plain faced unless otherwise specified, and the center-to-base dimension R shall be the finished dimension.
(10) Bases may be cast integral or attached as weldments at the option of the manufacturer.
(11) The bases of these fittings are intended for support in compression and are not to be used for anchors or supports in tension or shear.

TABLE STARTS ON NEXT PAGE

(20)

Table 12C Dimensions of Class 300 Flanged Fittings

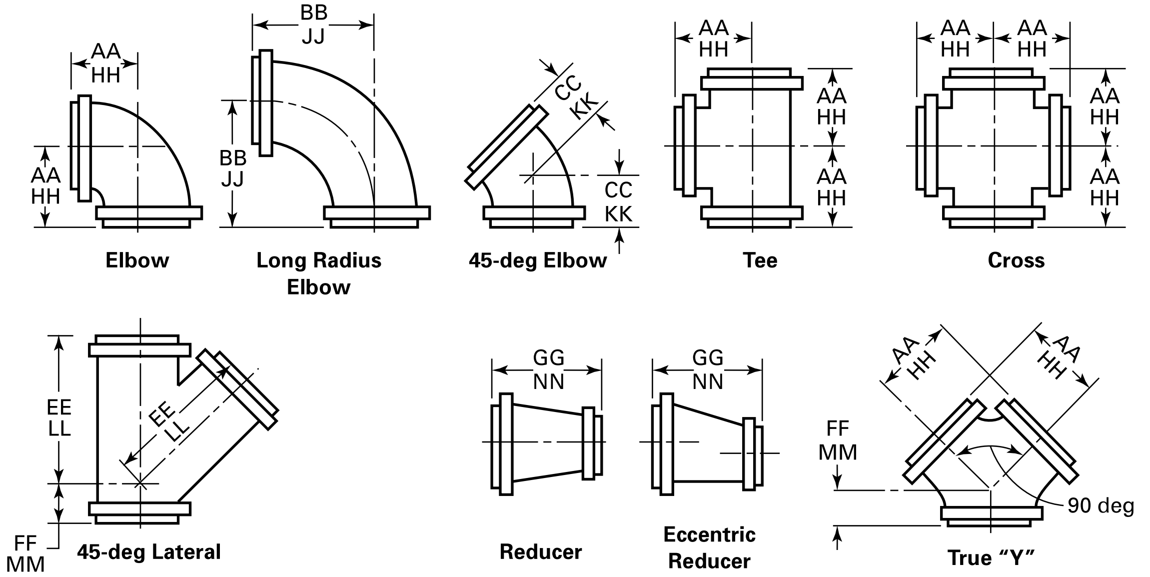

1	2	3	4	5	6	7	8	9	10	11	12
					0.06-in. Raised Face (Flange Edge) (4)						Ring Joint (4)
Nominal Pipe Size, NPS	Outside Diameter of Flange, *O*	Minimum Thickness of Flange, t_f (1)–(4)	Minimum Wall Thickness of Fitting, t_m	Inside Diameter of Fitting, *d*	Center-to-Contact Surface of Raised Face Elbow, Tee, Cross, and True "Y," AA	Center-to-Contact Surface of Raised Face Long Radius Elbow, *BB*	Center-to-Contact Surface of Raised Face 45-deg Elbow, *CC*	Long Center-to-Contact Surface of Raised Face Lateral, *EE*	Short Center-to-Contact Surface of Raised Face Lateral and True "Y," *FF*	Contact Surface-to-Contact Surface of Raised Face Reducer, *GG* (5)	Center-to-End Elbow Tee, Cross, and True "Y," *HH* (6)
1	4.88	0.62	0.19	1.00	4.00	5.00	2.25	6.50	2.00	4.50	4.25
1¼	5.25	0.69	0.19	1.25	4.25	5.50	2.50	7.25	2.25	4.50	4.50
1½	6.12	0.75	0.19	1.50	4.50	6.00	2.75	8.50	2.50	4.50	4.75
2	6.50	0.81	0.25	2.00	5.00	6.50	3.00	9.00	2.50	5.00	5.31
2½	7.50	0.94	0.25	2.50	5.50	7.00	3.50	10.50	2.50	5.50	5.81
3	8.25	1.06	0.28	3.00	6.00	7.75	3.50	11.00	3.00	6.00	6.31
3½	9.00	1.12	0.29	3.50	6.50	8.50	4.00	12.50	3.00	6.50	6.81
4	10.00	1.19	0.31	4.00	7.00	9.00	4.50	13.50	3.00	7.00	7.31
5	11.00	1.31	0.38	5.00	8.00	10.25	5.00	15.00	3.50	8.00	8.31
6	12.50	1.38	0.38	6.00	8.50	11.50	5.50	17.50	4.00	9.00	8.81
8	15.00	1.56	0.44	8.00	10.00	14.00	6.00	20.50	5.00	11.00	10.31
10	17.50	1.81	0.50	10.00	11.50	16.50	7.00	24.00	5.50	12.00	11.81
12	20.50	1.94	0.56	12.00	13.00	19.00	8.00	27.50	6.00	14.00	13.31
14	23.00	2.06	0.62	13.25	15.00	21.50	8.50	31.00	6.50	16.00	15.31
16	25.50	2.19	0.69	15.25	16.50	24.00	9.50	34.50	7.50	18.00	16.81
18	28.00	2.31	0.75	17.00	18.00	26.50	10.00	37.50	8.00	19.00	18.31
20	30.50	2.44	0.81	19.00	19.50	29.00	10.50	40.50	8.50	20.00	19.89
24	36.00	2.69	0.94	23.00	22.50	34.00	12.00	47.50	10.00	24.00	22.94

Table 12C Dimensions of Class 300 Flanged Fittings

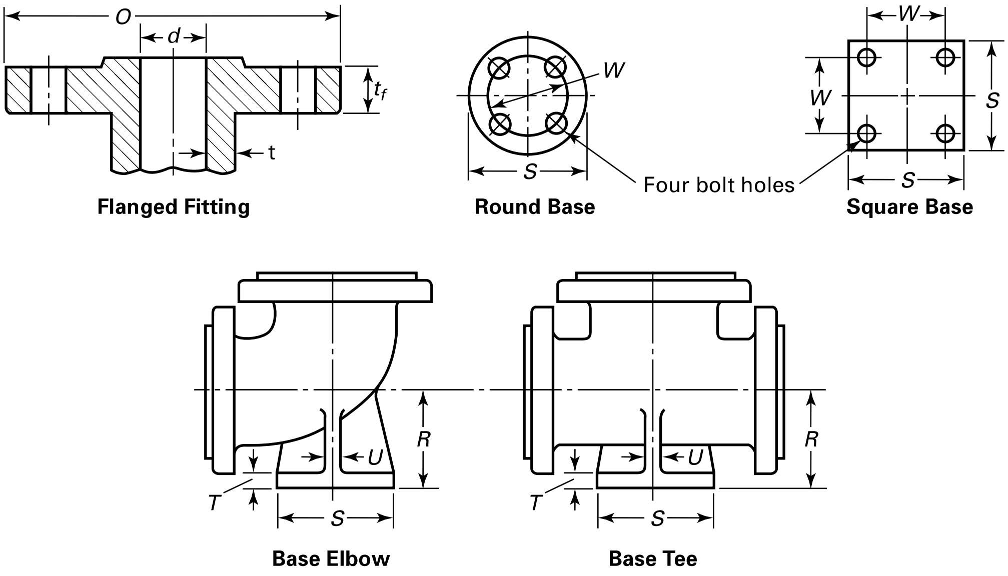

13	14	15	16	17	18	19	20	21	22	23	1
Ring Joint (5)									Base Drilling (11)		
Center-to-End Long Radius Elbow, *JJ* (7)	Center-to-End 45-deg Elbow, *KK* (7)	Long Center-to-End Lateral, *LL* (7)	Short Center-to-End Lateral and True "Y," *MM* (7)	End-to-End Reducer, *NN*	Center-to-Base, *R* (7)-(9)	Diameter of Round Base or Width of Square Base, *S* (7)	Thickness of Base, *T* (7)-(10)	Thickness of Ribs, *U* (7)	Bolt Circle or Bolt Spacing, *W*	Diameter of Drilled Holes	Nominal Pipe Size, NPS
5.25	2.50	6.75	2.25	...	...	...	...	...	...	...	1
5.75	2.75	7.50	2.50	...	...	...	...	...	...	...	1¼
6.25	3.00	8.75	2.75	...	...	...	...	...	...	...	1½
6.81	3.31	9.31	2.81	...	4.50	5.25	0.75	0.50	3.88	¾	2
7.31	3.81	10.81	2.81	...	4.75	5.25	0.75	0.50	3.88	¾	2½
8.06	3.81	11.31	3.31	...	5.25	6.12	0.81	0.62	4.50	⅞	3
8.81	4.31	12.81	3.31	...	5.62	6.12	0.81	0.62	4.50	⅞	3½
9.31	4.88	13.81	3.31	...	6.00	6.50	0.88	0.62	5.00	¾	4
10.56	5.31	15.31	3.81	...	6.75	7.50	1.00	0.75	5.88	⅞	5
11.81	5.81	17.81	4.31	...	7.50	7.50	1.00	0.75	5.88	⅞	6
14.31	6.31	20.81	5.31	...	9.00	10.00	1.25	0.88	7.88	⅞	8
16.81	7.31	24.31	5.81	...	10.50	10.00	1.25	0.88	7.88	⅞	10
19.31	8.31	27.81	6.31	...	12.00	12.50	1.44	1.00	10.62	⅞	12
21.81	8.81	31.31	6.81	...	13.50	12.50	1.44	1.00	10.62	⅞	14
24.31	9.81	34.81	7.81	...	14.75	12.50	1.44	1.12	10.62	⅞	16
26.81	10.31	37.81	8.31	...	16.25	15.00	1.62	1.12	13.00	1	18
29.38	10.88	40.88	8.88	...	17.88	15.00	1.62	1.25	13.00	1	20
34.44	12.44	47.94	10.44	...	20.75	17.50	1.88	1.25	15.25	1⅛	24

Table 12C Dimensions of Class 300 Flanged Fittings (Cont'd)

GENERAL NOTES:
(a) Dimensions are in inches.
(b) For tolerances, see section 7.
(c) For facings, see para. 6.4.
(d) For flange bolt holes, see para. 6.5 and Table 10C.
(e) For spot facing, see para. 6.6.
(f) For intersecting centerlines, center-to-contact surface, and center-to-end dimensions of side outlet fittings, see para. 6.2.4.
(g) For center-to-contact surface and center-to-end dimensions of special degree elbows, see para. 6.2.5.
(h) For reinforcement of certain fittings, see para. 6.1.1.
(i) For drains, see para. 6.12.

NOTES:
(1) These fittings may be supplied with a flat face flange. The flat face may be either the full t_f dimension thickness plus 0.06 in. or the t_f dimension thickness without the raised face height. See para. 6.3.2 for additional restrictions.
(2) The thickness of the flange dimension illustrated is for regularly furnished 0.06-in. raised face (except lapped); for thickness requirements of other facings, see Figure 6.
(3) The thickness of flange minimum dimensions for loose flanges, Table 9, size NPS 3½ and smaller are slightly heavier than for flanges on these fittings that are reinforced by being cast integral with the body of fitting.
(4) For center-to-contact surface and center-to-end dimensioins of reducing fittings, see para. 6.2.3.
(5) For contact surface-to-contact surface and end-to-end dimensions of reducers and eccentric reducers, see para. 6.2.3.
(6) These dimensions apply to straight sizes only (see paras. 6.2.3 and 6.4.2.2). For center-to-end dimensions of reducing fittings or end-to-end dimensions of reducers, use center-to-contact surface or contact surface-to-contact surface dimensions of 0.06-in. raised face (flange edge) for the largest opening, and add the proper height to provide for the ring joint groove applying to each flange. See Table 5C for ring joint facing dimensions.
(7) The base dimensions apply to all straight and reducing sizes.
(8) The reducing fittings, the size, and center-to-face dimension of base are determined by the size of the largest opening of fittings. In the case of reducing base elbows, orders shall specify whether the base shall be opposite the larger or smaller opening.
(9) Bases shall be plain faced unless otherwise specified, and the center-to-base dimension R shall be the finished dimension.
(10) Bases may be cast integral or attached as weldments at the option of the manufacturer.
(11) The bolt hole template for round base is the same as for Class 300 flanges (Table 11) of corresponding outside diameter, except using only four holes in all cases so placed as to straddle centerlines. The bases of these fittings are intended for support in compression and are not for anchors or supports in tension or shear.

Table 13 Templates for Drilling Class 400 Pipe Flanges (20)

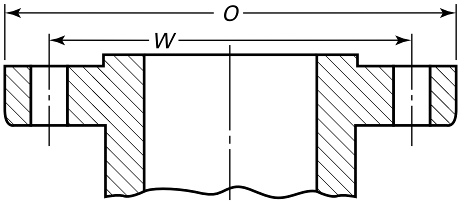

Flange

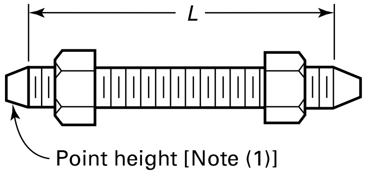

Stud Bolt With Nuts

1	2	3	4	5	6	7	8	9
		Drilling (2), (3)				Length of Bolts, *L* (1), (4)		
Nominal Pipe Size, NPS	Outside Diameter of Flange, *O*	Diameter of Bolt Circle, *W*	Diameter of Bolt Holes	Number of Bolts	Diameter of Bolts	Raised Face 0.25 in.	Male and Female/ Tongue and Groove	Ring Joint
1/2	(5)	(5)	(5)	(5)	(5)	(5)	(5)	(5)
3/4	(5)	(5)	(5)	(5)	(5)	(5)	(5)	(5)
1	(5)	(5)	(5)	(5)	(5)	(5)	(5)	(5)
1 1/4	(5)	(5)	(5)	(5)	(5)	(5)	(5)	(5)
1 1/2	(5)	(5)	(5)	(5)	(5)	(5)	(5)	(5)
2	(5)	(5)	(5)	(5)	(5)	(5)	(5)	(5)
2 1/2	(5)	(5)	(5)	(5)	(5)	(5)	(5)	(5)
3	(5)	(5)	(5)	(5)	(5)	(5)	(5)	(5)
3 1/2	(5)	(5)	(5)	(5)	(5)	(5)	(5)	(5)
4	254	200.2	1	8	7/8	140	135	140
5	279	235.0	1	8	7/8	145	135	145
6	318	269.7	1	12	7/8	150	145	150
8	381	330.2	1 1/8	12	1	170	165	170
10	444	387.4	1 1/4	16	1 1/8	190	185	190
12	521	450.8	1 3/8	16	1 1/4	205	195	205
14	584	514.4	1 3/8	20	1 1/4	210	205	210
16	648	571.5	1 1/2	20	1 3/8	220	215	220
18	711	628.6	1 1/2	24	1 3/8	230	220	230
20	775	685.8	1 5/8	24	1 1/2	240	235	250
22	838	743.0	1 3/4	24	1 5/8	255	250	260
24	914	812.8	1 7/8	24	1 3/4	265	260	280

GENERAL NOTES:
(a) Dimensions are in millimeters, except for diameters of bolts and bolt holes, which are in inches.
(b) For other dimensions, see Table 14.

NOTES:
(1) The length of the stud bolt does not include the height of the points. See para. 6.10.2.
(2) For flange bolt holes, see para. 6.5.
(3) For spot facing, see para. 6.6.
(4) Bolt lengths not shown in the table may be determined in accordance with Nonmandatory Appendix C (see para. 6.10.2).
(5) Use Class 600 dimensions in this size.

Table 13C Templates for Drilling Class 400 Pipe Flanges

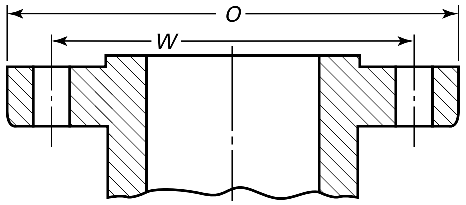

Flange

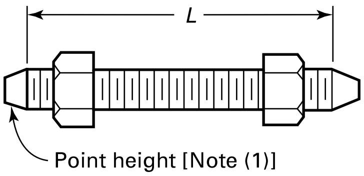

Stud Bolt With Nuts

1	2	3	4	5	6	7	8	9
		Drilling (2), (3)				Length of Bolts, *L* (1), (4)		
Nominal Pipe Size	Outside Diameter of Flange, *O*	Diameter of Bolt Circle, *W*	Diameter of Bolt Holes	Number of Bolts	Diameter of Bolts	Raised Face 0.25 in.	Male and Female/ Tongue and Groove	Ring Joint
½	(5)	(5)	(5)	(5)	(5)	(5)	(5)	(5)
¾	(5)	(5)	(5)	(5)	(5)	(5)	(5)	(5)
1	(5)	(5)	(5)	(5)	(5)	(5)	(5)	(5)
1¼	(5)	(5)	(5)	(5)	(5)	(5)	(5)	(5)
1½	(5)	(5)	(5)	(5)	(5)	(5)	(5)	(5)
2	(5)	(5)	(5)	(5)	(5)	(5)	(5)	(5)
2½	(5)	(5)	(5)	(5)	(5)	(5)	(5)	(5)
3	(5)	(5)	(5)	(5)	(5)	(5)	(5)	(5)
3½	(5)	(5)	(5)	(5)	(5)	(5)	(5)	(5)
4	10.00	7.88	1	8	⅞	5.50	5.25	5.50
5	11.00	9.25	1	8	⅞	5.75	5.25	5.75
6	12.50	10.62	1	12	⅞	6.00	5.75	6.00
8	15.00	13.00	1⅛	12	1	6.75	6.50	6.75
10	17.50	15.25	1¼	16	1⅛	7.50	7.25	7.50
12	20.50	17.75	1⅜	16	1¼	8.00	7.75	8.00
14	23.00	20.25	1⅜	20	1¼	8.25	8.00	8.25
16	25.50	22.50	1½	20	1⅜	8.75	8.50	8.75
18	28.00	24.75	1½	24	1⅜	9.00	8.75	9.00
20	30.50	27.00	1⅝	24	1½	9.50	9.25	9.75
22	33.00	29.25	1¾	24	1⅝	10.00	9.75	10.25
24	36.00	32.00	1⅞	24	1¾	10.50	10.25	11.00

GENERAL NOTES:
(a) Dimensions are in inches.
(b) For other dimensions, see Table 14C.

NOTES:
(1) The length of the stud bolt does not include the height of the points (see para. 6.10.2).
(2) For flange bolt holes, see para. 6.5.
(3) For spot facing, see para. 6.6.
(4) Bolt lengths not shown in the table may be determined in accordance with Nonmandatory Appendix C (see para. 6.10.2).
(5) Use Class 600 dimensions in this size.

Table 14 Dimensions of Class 400 Flanges

(20)

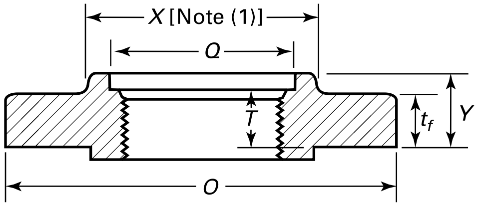

Threaded

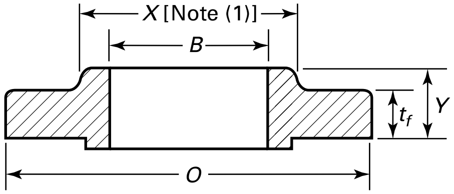

Slip-On Welding

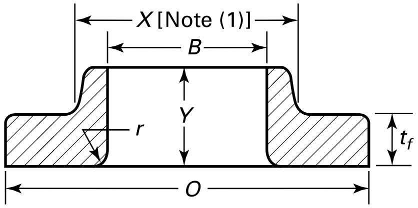

Lapped

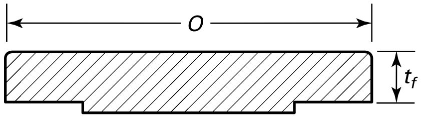

Blind

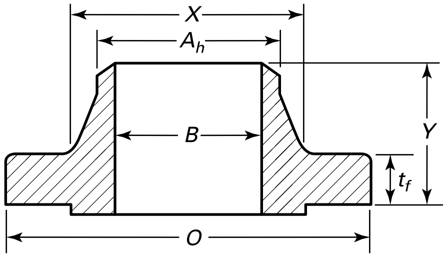

Welding Neck

1	2	3	4	5	6	7	8	9	10	11	12	13	14
					Length Through Hub				Bore				
Nom. Pipe Size, NPS	Outside Diam. of Flange, *O*	Min. Thickness of Flange, t_f	Diam. of Hub, *X*	Hub Diam. Beginning of Chamfer Welding Neck, A_h (2)	Threaded/ Slip-On, *Y*	Lapped, *Y*	Welding Neck, *Y*	Minimum Thread Length Threaded Flange, *T* (3)	Min. Slip-On, *B*	Min. Lapped, *B*	Welding Neck, *B*	Corner Bore Radius of Lapped Flange and Pipe, *r*	Minimum Counterbore Threaded Flange, *Q*
½	(4)	(4)	(4)	(4)	(4)	(4)	(4)	(4)	(4)	(4)	(4)	(4)	(4)
¾	(4)	(4)	(4)	(4)	(4)	(4)	(4)	(4)	(4)	(4)	(4)	(4)	(4)
1	(4)	(4)	(4)	(4)	(4)	(4)	(4)	(4)	(4)	(4)	(4)	(4)	(4)
1¼	(4)	(4)	(4)	(4)	(4)	(4)	(4)	(4)	(4)	(4)	(4)	(4)	(4)
1½	(4)	(4)	(4)	(4)	(4)	(4)	(4)	(4)	(4)	(4)	(4)	(4)	(4)
2	(4)	(4)	(4)	(4)	(4)	(4)	(4)	(4)	(4)	(4)	(4)	(4)	(4)
2½	(4)	(4)	(4)	(4)	(4)	(4)	(4)	(4)	(4)	(4)	(4)	(4)	(4)

Table 14 Dimensions of Class 400 Flanges (Cont'd)

1	2	3	4	5	6	7	8	9	10	11	12	13	14
					Length Through Hub				Bore				
Nom. Pipe Size, NPS	Outside Diam. of Flange, *O*	Min. Thickness of Flange, t_f	Diam. of Hub, *X*	Hub Diam. Beginning of Chamfer Welding Neck, A_h (2)	Threaded/ Slip-On, *Y*	Lapped, *Y*	Welding Neck, *Y*	Minimum Thread Length Threaded Flange, *T* (3)	Min. Slip-On, *B*	Min. Lapped, *B*	Welding Neck, *B*	Corner Bore Radius of Lapped Flange and Pipe, *r*	Minimum Counterbore Threaded Flange, *Q*
3	(4)	(4)	(4)	(4)	(4)	(4)	(4)	(4)	(4)	(4)	(4)	(4)	(4)
3½	(4)	(4)	(4)	(4)	(4)	(4)	(4)	(4)	(4)	(4)	(4)	(4)	(4)
4	254	35.1	146	114.3	51	51	89	37	116.1	116.8	(5)	11	117.6
5	279	38.1	178	141.2	54	54	102	43	143.8	144.5	(5)	11	144.5
6	318	41.1	206	168.4	57	57	103	46	170.7	171.4	(5)	13	171.4
8	381	47.8	260	219.2	68	68	117	51	221.5	222.2	(5)	13	222.2
10	444	53.8	321	273.0	73	102	124	56	276.4	277.4	(5)	13	276.4
12	521	57.2	375	323.8	79	108	137	60	327.2	328.2	(5)	13	328.7
14	584	60.5	425	355.6	84	117	149	64	359.2	360.2	(5)	13	360.4
16	648	63.5	483	406.4	94	127	152	68	410.5	411.2	(5)	13	411.2
18	711	66.5	533	457.2	99	137	165	70	461.8	462.3	(5)	13	462.0
20	775	69.8	587	508.0	102	146	168	73	513.1	514.4	(5)	13	512.8
22	838	73.2	641	558.8	108	152	171	...	564.4	565.2	(5)	13	...
24	914	76.2	702	609.6	114	159	175	83	616.0	616.0	(5)	13	614.4

GENERAL NOTES:

(a) Dimensions are in millimeters, except for the diameter of bolts and bolt holes, which are in inches.
(b) For tolerances, see section 7.
(c) For facings, see para. 6.4.
(d) For flange bolt holes, see para. 6.5 and Table 13.
(e) For spot facing, see para 6.6.
(f) For reducing threaded and slip-on flanges, see Table 6.
(g) Blind flanges may be made with or without hubs at the manufacturer's option.
(h) For reducing welding neck flanges, see para 6.8.

NOTES:

(1) This dimension is for the large end of the hub, which may be straight or tapered. Taper shall not exceed 7 deg on threaded, slip-on, socket-welding, and lapped flanges. This dimension is defined as the diameter at the intersection between the hub taper and back face of the flange.
(2) For welding end bevel, see para. 6.7.
(3) For thread of threaded flanges, see para. 6.9.
(4) Use Class 600 dimensions in this size.
(5) To be specified by the purchaser.

Table 14C Dimensions of Class 400 Flanges

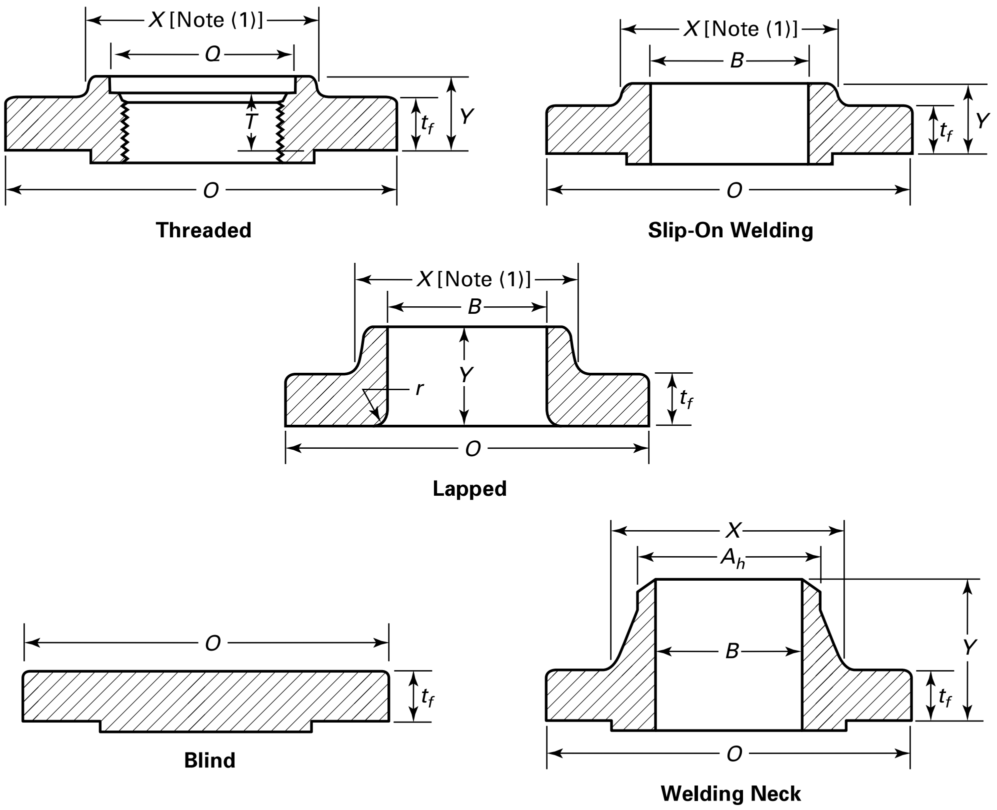

1	2	3	4	5	6	7	8	9	10	11	12	13	14
					Length Through Hub				Bore				
Nom. Pipe Size	Outside Diam. of Flange, *O*	Min. Thickness of Flange, t_f	Diam. of Hub, *X*	Hub Diam. Beginning of Chamfer Welding Neck, A_h (2)	Threaded Slip-On, *Y*	Lapped, *Y*	Welding Neck, *Y*	Minimum Thread Length Threaded Flange, *T* (3)	Min. Slip-On, *B*	Min. Lapped, *B*	Welding Neck, *B*	Corner Bore Radius of Lapped Flange and Pipe, *r*	Minimum Counterbore Threaded Flange, *Q*
½	(4)	(4)	(4)	(4)	(4)	(4)	(4)	(4)	(4)	(4)	(4)	(4)	(4)
¾	(4)	(4)	(4)	(4)	(4)	(4)	(4)	(4)	(4)	(4)	(4)	(4)	(4)
1	(4)	(4)	(4)	(4)	(4)	(4)	(4)	(4)	(4)	(4)	(4)	(4)	(4)
1¼	(4)	(4)	(4)	(4)	(4)	(4)	(4)	(4)	(4)	(4)	(4)	(4)	(4)
1½	(4)	(4)	(4)	(4)	(4)	(4)	(4)	(4)	(4)	(4)	(4)	(4)	(4)
2	(4)	(4)	(4)	(4)	(4)	(4)	(4)	(4)	(4)	(4)	(4)	(4)	(4)

Table 14C Dimensions of Class 400 Flanges (Cont'd)

1	2	3	4	5	6	7	8	9	10	11	12	13	14
					Length Through Hub				Bore				
Nom. Pipe Size	Outside Diam. of Flange, *O*	Min. Thickness of Flange, t_f	Diam. of Hub, *X*	Hub Diam. Beginning of Chamfer Welding Neck, A_h (2)	Threaded Slip-On, *Y*	Lapped, *Y*	Welding Neck, *Y*	Minimum Thread Length Threaded Flange, *T* (3)	Min. Slip-On, *B*	Min. Lapped, *B*	Welding Neck, *B*	Corner Bore Radius of Lapped Flange and Pipe, *r*	Minimum Counterbore Threaded Flange, *Q*
2½	(4)	(4)	(4)	(4)	(4)	(4)	(4)	(4)	(4)	(4)	(4)	(4)	(4)
3	(4)	(4)	(4)	(4)	(4)	(4)	(4)	(4)	(4)	(4)	(4)	(4)	(4)
3½	(4)	(4)	(4)	(4)	(4)	(4)	(4)	(4)	(4)	(4)	(4)	(4)	(4)
4	10.00	1.38	5.75	4.50	2.00	2.00	3.50	1.44	4.57	4.60	(5)	0.44	4.63
5	11.00	1.50	7.00	5.56	2.12	2.12	4.00	1.69	5.66	5.69	(5)	0.44	5.69
6	12.50	1.62	8.12	6.63	2.25	2.25	4.06	1.81	6.72	6.75	(5)	0.50	6.75
8	15.00	1.88	10.25	8.63	2.69	2.69	4.62	2.00	8.72	8.75	(5)	0.50	8.75
10	17.50	2.12	12.62	10.75	2.88	4.00	4.88	2.19	10.88	10.92	(5)	0.50	10.88
12	20.50	2.25	14.75	12.75	3.12	4.25	5.38	2.38	12.88	12.92	(5)	0.50	12.94
14	23.00	2.38	16.75	14.00	3.31	4.62	5.88	2.50	14.14	14.18	(5)	0.50	14.19
16	25.50	2.50	19.00	16.00	3.69	5.00	6.00	2.69	16.16	16.19	(5)	0.50	16.19
18	28.00	2.62	21.00	18.00	3.88	5.38	6.50	2.75	18.18	18.20	(5)	0.50	18.19
20	30.50	2.75	23.12	20.00	4.00	5.75	6.62	2.88	20.20	20.25	(5)	0.50	20.19
22	33.00	2.88	25.25	22.00	4.25	6.00	6.75	...	22.22	22.25	(5)	0.50	...
24	36.00	3.00	27.62	24.00	4.50	6.25	6.88	3.25	24.25	24.25	(5)	0.50	24.19

GENERAL NOTES:
(a) Dimensions are in inches.
(b) For tolerances, see section 7.
(c) For facings, see para. 6.4.
(d) For flange bolt holes, see para. 6.5 and Table 13C.
(e) For spot facing, see para. 6.6.
(f) For reducing threaded and slip-on flanges, see Table 6C.
(g) Blind flanges may be made with or without hubs at the manufacturer's option.
(h) For reducing welding neck flanges, see para. 6.8.

NOTES:
(1) This dimension is for the large end of the hub, which may be straight or tapered. Taper shall not exceed 7 deg on threaded, slip-on, and lapped flanges.
(2) For welding end bevel, see para. 6.7.
(3) For thread in threaded flanges, see para. 6.9.
(4) Use Class 600 dimensions in this size.
(5) To be specified by the purchaser.

Table 15 Templates for Drilling Class 600 Pipe Flanges and Flanged Fittings (20)

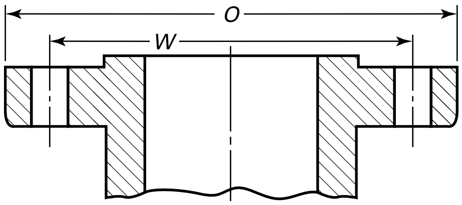

Flange

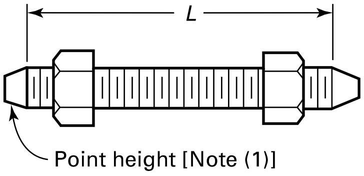

Stud Bolt With Nuts

1	2	3	4	5	6	7	8	9
		Drilling (2), (3)				Length of Bolts, *L* (1), (4)		
Nominal Pipe Size, NPS	Outside Diameter of Flange, *O*	Diameter of Bolt Circle, *W*	Diameter of Bolt Holes, in.	Number of Bolts	Diameter of Bolts, in.	6.4-mm Raised Face	Male and Female/ Tongue and Groove	Ring Joint
1/2	95	66.5	5/8	4	1/2	75	70	75
3/4	117	82.6	3/4	4	5/8	90	85	90
1	124	88.9	3/4	4	5/8	90	85	90
1 1/4	133	98.6	3/4	4	5/8	95	90	95
1 1/2	155	114.3	7/8	4	3/4	110	100	110
2	165	127.0	3/4	8	5/8	110	100	110
2 1/2	190	149.4	7/8	8	3/4	120	115	120
3	210	168.1	7/8	8	3/4	125	120	125
3 1/2	229	184.2	1	8	7/8	140	135	140
4	273	215.9	1	8	7/8	145	140	145
5	330	266.7	1 1/8	8	1	165	160	165
6	356	292.1	1 1/8	12	1	170	165	170
8	419	349.2	1 1/4	12	1 1/8	190	185	195
10	508	431.8	1 3/8	16	1 1/4	215	210	215
12	559	489.0	1 3/8	20	1 1/4	220	215	220
14	603	527.0	1 1/2	20	1 3/8	235	230	235
16	686	603.2	1 5/8	20	1 1/2	255	250	255
18	743	654.0	1 3/4	20	1 5/8	275	265	275
20	813	723.9	1 3/4	24	1 5/8	285	280	290
22	870	777.7	1 7/8	24	1 3/4	305	...	310
24	940	838.2	2	24	1 7/8	330	325	335

GENERAL NOTES:
(a) Dimensions are in millimeters, except for the diameters of the bolts and bolt holes, which are expressed in inches.
(b) For other dimensions, see Table 16.

NOTES:
(1) The length of the stud bolt does not include the height of the points (see para 6.10.2).
(2) For flange bolt holes, see para. 6.5.
(3) For spot facing, see para 6.6.
(4) Bolt lengths not shown in the table may be in accordance with Nonmandatory Appendix C (see para. 6.10.2).

Table 15C Templates for Drilling Class 600 Pipe Flanges and Flanged Fittings

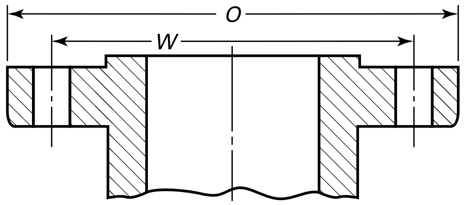

Flange

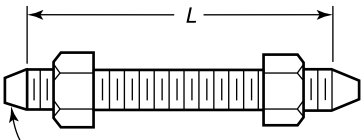

Stud Bolt With Nuts

1	2	3	4	5	6	7	8	9
		Drilling (2), (3)				Length of Bolts, *L* (1), (4)		
Nominal Pipe Size	Outside Diameter of Flange, *O*	Diameter of Bolt Circle, *W*	Diameter of Bolt Holes	Number of Bolts	Diameter of Bolts	Raised Face 0.25 in.	Male and Female/ Tongue and Groove	Ring Joint
½	3.75	2.62	⅝	4	½	3.00	2.75	3.00
¾	4.62	3.25	¾	4	⅝	3.50	3.25	3.50
1	4.88	3.50	¾	4	⅝	3.50	3.25	3.50
1¼	5.25	3.88	¾	4	⅝	3.75	3.50	3.75
1½	6.12	4.50	⅞	4	¾	4.25	4.00	4.25
2	6.50	5.00	¾	8	⅝	4.25	4.00	4.25
2½	7.50	5.88	⅞	8	¾	4.75	4.50	4.75
3	8.25	6.62	⅞	8	¾	5.00	4.75	5.00
3½	9.00	7.25	1	8	⅞	5.50	5.25	5.50
4	10.75	8.50	1	8	⅞	5.75	5.50	5.75
5	13.00	10.50	1⅛	8	1	6.50	6.25	6.50
6	14.00	11.50	1⅛	12	1	6.75	6.50	6.75
8	16.50	13.75	1¼	12	1⅛	7.50	7.25	7.75
10	20.00	17.00	1⅜	16	1¼	8.50	8.25	8.50
12	22.00	19.25	1⅜	20	1¼	8.75	8.50	8.75
14	23.75	20.75	1½	20	1⅜	9.25	9.00	9.25
16	27.00	23.75	1⅝	20	1½	10.00	9.75	10.00
18	29.25	25.75	1¾	20	1⅝	10.75	10.50	10.75
20	32.00	28.50	1¾	24	1⅝	11.25	11.00	11.50
22	34.25	30.62	1⅞	24	1¾	12.00	...	12.25
24	37.00	33.00	2	24	1⅞	13.00	12.75	13.25

GENERAL NOTES:
(a) Dimensions are in inches.
(b) For other dimensions, see Table 16C.

NOTES:
(1) The length of the stud bolt does not include the height of the points (see para. 6.10.2).
(2) For flange bolt holes, see para. 6.5.
(3) For spot facing, see para. 6.6.
(4) Bolt lengths not shown in the table may be determined in accordance with Nonmandatory Appendix C (see para. 6.10.2).

Table 16 Dimensions of Class 600 Flanges

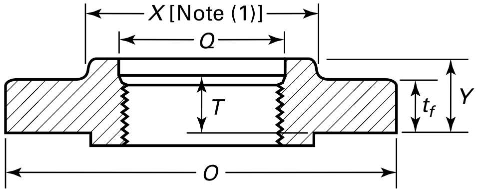

Threaded

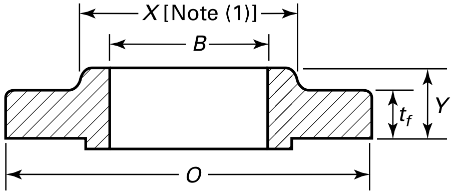

Slip-On Welding

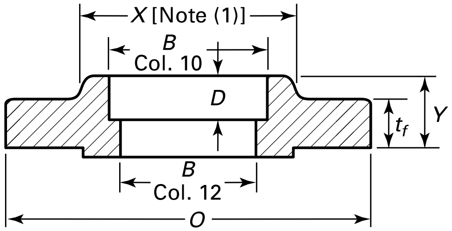

Socket Welding (NPS 1/2 to 3 Only)

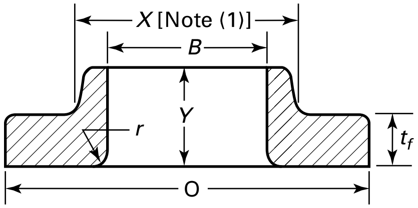

Lapped

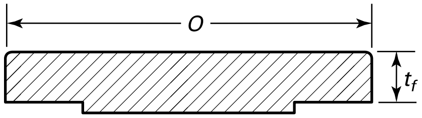

Blind

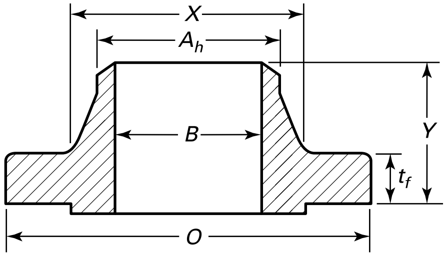

Welding Neck

1	2	3	4	5	6	7	8	9	10	11	12	13	14	15
					Length Through Hub				Bore					
Nominal Pipe Size, NPS	Outside Diameter of Flange, *O*	Minimum Thickness of Flange, t_f	Diameter of Hub, *X*	Hub Diameter Beginning of Chamfer Welding Neck, A_h (2)	Threaded/ Slip-On/ Socket Welding, *Y*	Lapped, *Y*	Welding Neck, *Y*	Minimum Thread Length Threaded Flange, *T* (3)	Minimum Slip-On/ Socket Welding, *B*	Minimum Lapped, *B*	Welding Neck/ Socket Welding, *B*	Corner Bore Radius of Lapped Flange and Pipe, *r*	Minimum Counterbore Threaded Flange, *Q*	Depth of Socket, *D*
½	95	14.2	38	21.3	22	22	52	16	22.4	22.9	(4)	3	23.6	10
¾	117	15.7	48	26.7	25	25	57	16	27.7	28.2	(4)	3	29.0	11
1	124	17.5	54	33.5	27	27	62	18	34.5	35.1	(4)	3	35.8	13
1¼	133	20.6	64	42.2	28	28	67	21	43.2	43.7	(4)	5	44.4	14
1½	155	22.4	70	48.3	32	32	70	22	49.5	50.0	(4)	6	50.5	16

Table 16 Dimensions of Class 600 Flanges (Cont'd)

1	2	3	4	5	6	7	8	9	10	11	12	13	14	15
					Length Through Hub				Bore					
Nominal Pipe Size, NPS	Outside Diameter of Flange, *O*	Minimum Thickness of Flange, t_f	Diameter of Hub, *X*	Hub Diameter Beginning of Chamfer Welding Neck, A_h (2)	Threaded/ Slip-On/ Socket Welding, *Y*	Lapped, *Y*	Welding Neck, *Y*	Minimum Thread Length Threaded Flange, *T* (3)	Minimum Slip-On/ Socket Welding, *B*	Minimum Lapped, *B*	Welding Neck/ Socket Welding, *B*	Corner Bore Radius of Lapped Flange and Pipe, *r*	Minimum Counterbore Threaded Flange, *Q*	Depth of Socket, *D*
2	165	25.4	84	60.5	37	37	73	28	62.0	62.5	(4)	8	63.5	18
2½	190	28.4	100	73.2	41	41	79	32	74.7	75.4	(4)	8	76.2	19
3	210	31.8	117	88.9	46	46	83	35	90.7	91.4	(4)	10	92.2	21
3½	229	35.1	133	101.6	49	49	86	40	103.4	104.1	(4)	10	104.9	...
4	273	38.1	152	114.3	54	54	102	41	116.1	116.8	(4)	11	117.6	...
5	330	44.4	189	141.2	60	60	114	48	143.8	144.5	(4)	11	144.5	...
6	356	47.8	222	168.4	67	67	117	51	170.7	171.4	(4)	13	171.4	...
8	419	55.6	273	219.2	76	76	133	57	221.5	222.2	(4)	13	222.2	...
10	508	63.5	343	273.0	86	111	152	65	276.2	277.4	(4)	13	276.4	...
12	559	66.5	400	323.8	92	117	155	70	327.0	328.2	(4)	13	328.7	...
14	603	69.8	432	355.6	94	127	165	73	359.2	360.2	(4)	13	360.4	...
16	686	76.2	495	406.4	106	140	178	78	410.5	411.2	(4)	13	411.2	...
18	743	82.6	546	457.2	117	152	184	79	461.8	462.3	(4)	13	462.0	...
20	813	88.9	610	508.0	127	165	190	83	513.1	514.4	(4)	13	512.8	...
22	870	95.2	663	558.8	133	175	197	...	564.4	565.2	(4)	13	...	...
24	940	101.6	718	609.6	140	184	203	92	616.0	616.0	(4)	13	614.4	...

GENERAL NOTES:
(a) Dimensions are in millimeters.
(b) For tolerance, see section 7.
(c) For facings, see para. 6.4.
(d) For flange bolt holes, see para. 6.5 and Table 15C.
(e) For spot facing, see para. 6.6.
(f) For reducing threaded and slip-on flanges, see Table 6.
(g) Blind flanges may be made with or without hubs at the manufacturer's option.
(h) For reducing welding neck flanges, see para. 6.8.

NOTES:
(1) This dimension is for the large end of the hub, which may be straight or tapered. Taper shall not exceed 7 deg on threaded, slip-on, socket-welding, and lapped flanges. This dimension is defined as the diameter at the intersection between the hub taper and back face of the flange.
(2) For welding end bevel, see para. 6.7.
(3) For thread of threaded flanges, see para. 6.9.
(4) To be specified by the purchaser.

Table 16C Dimensions of Class 600 Flanges

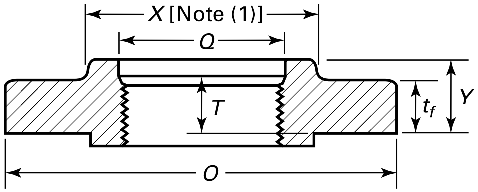

Threaded

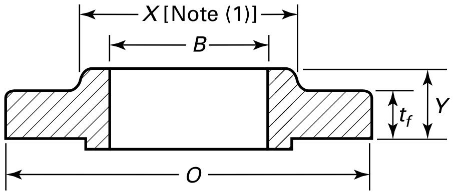

Slip-On Welding

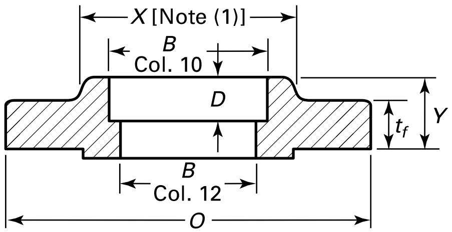

Socket Welding (NPS $^1/_2$ to 3 Only)

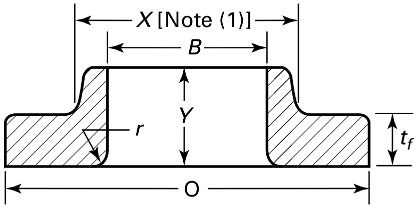

Lapped

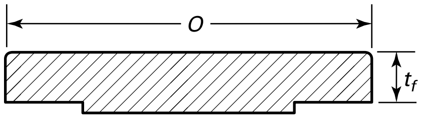

Blind

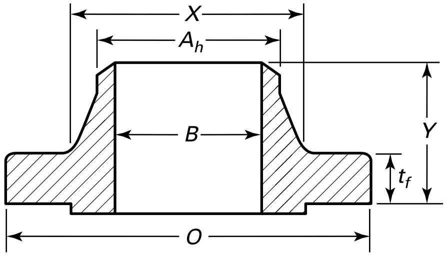

Welding Neck

1	2	3	4	5	6	7	8	9	10	11	12	13	14	15
					Length Through Hub				Bore					
Nominal Pipe Size	Outside Diameter of Flange, *O*	Minimum Thickness of Flange, t_f	Diameter of Hub, *X*	Hub Diameter Beginning of Chamfer Welding Neck, A_h (2)	Threaded Slip-On Socket Welding, *Y*	Lapped, *Y*	Welding Neck, *Y*	Minimum Thread Length Threaded Flange, *T* (3)	Minimum Slip-On/ Socket Welding, *B*	Minimum Lapped, *B*	Welding Neck/ Socket Welding, *B*	Corner Bore Radius of Lapped Flange and Pipe, *r*	Minimum Counter-bore Threaded Flange, *Q*	Depth of Socket, *D*
½	3.75	0.56	1.50	0.84	0.88	0.88	2.06	0.62	0.88	0.90	(4)	0.12	0.93	0.38
¾	4.62	0.62	1.88	1.05	1.00	1.00	2.25	0.62	1.09	1.11	(4)	0.12	1.14	0.44
1	4.88	0.69	2.12	1.32	1.06	1.06	2.44	0.69	1.36	1.38	(4)	0.12	1.41	0.50
1¼	5.25	0.81	2.50	1.66	1.12	1.12	2.62	0.81	1.70	1.72	(4)	0.19	1.75	0.56
1½	6.12	0.88	2.75	1.90	1.25	1.25	2.75	0.88	1.95	1.97	(4)	0.25	1.99	0.62

Table 16C Dimensions of Class 600 Flanges (Cont'd)

1	2	3	4	5	6	7	8	9	10	11	12	13	14	15
					Length Through Hub				Bore					
Nominal Pipe Size	Outside Diameter of Flange, *O*	Minimum Thickness of Flange, t_f	Diameter of Hub, *X*	Hub Diameter Beginning of Chamfer Welding Neck, A_h (2)	Threaded Slip-On Socket Welding, *Y*	Lapped, *Y*	Welding Neck, *Y*	Minimum Thread Length Threaded Flange, *T* (3)	Minimum Slip-On/ Socket Welding, *B*	Minimum Lapped, *B*	Welding Neck/ Socket Welding, *B*	Corner Bore Radius of Lapped Flange and Pipe, *r*	Minimum Counter-bore Threaded Flange, *Q*	Depth of Socket, *D*
2	6.50	1.00	3.31	2.38	1.44	1.44	2.88	1.12	2.44	2.46	(4)	0.31	2.50	0.69
2½	7.50	1.12	3.94	2.88	1.62	1.62	3.12	1.25	2.94	2.97	(4)	0.31	3.00	0.75
3	8.25	1.25	4.62	3.50	1.81	1.81	3.25	1.38	3.57	3.60	(4)	0.38	3.63	0.81
3½	9.00	1.38	5.25	4.00	1.94	1.94	3.38	1.56	4.07	4.10	(4)	0.38	4.13	...
4	10.75	1.50	6.00	4.50	2.12	2.12	4.00	1.62	4.57	4.60	(4)	0.44	4.63	...
5	13.00	1.75	7.44	5.56	2.38	2.38	4.50	1.88	5.66	5.69	(4)	0.44	5.69	...
6	14.00	1.88	8.75	6.63	2.62	2.62	4.62	2.00	6.72	6.75	(4)	0.50	6.75	...
8	16.50	2.19	10.75	8.63	3.00	3.00	5.25	2.25	8.72	8.75	(4)	0.50	8.75	...
10	20.00	2.50	13.50	10.75	3.38	4.38	6.00	2.56	10.88	10.92	(4)	0.50	10.88	...
12	22.00	2.62	15.75	12.75	3.62	4.62	6.12	2.75	12.88	12.92	(4)	0.50	12.94	...
14	23.75	2.75	17.00	14.00	3.69	5.00	6.50	2.88	14.14	14.18	(4)	0.50	14.19	...
16	27.00	3.00	19.50	16.00	4.19	5.50	7.00	3.06	16.16	16.19	(4)	0.50	16.19	...
18	29.25	3.25	21.50	18.00	4.62	6.00	7.25	3.12	18.18	18.20	(4)	0.50	18.19	...
20	32.00	3.50	24.00	20.00	5.00	6.50	7.50	3.25	20.20	20.25	(4)	0.50	20.19	...
22	34.25	3.75	26.25	22.00	5.25	6.88	7.75	...	22.22	22.25	(4)	0.50	...	...
24	37.00	4.00	28.25	24.00	5.50	7.25	8.00	3.62	24.25	24.25	(4)	0.50	24.19	...

GENERAL NOTES:
(a) Dimensions are in inches.
(b) For tolerances, see section 7.
(c) For facings, see para. 6.4.
(d) For flange bolt holes, see para. 6.5 and Table 15C.
(e) For spot facing, see para. 6.6.
(f) For reducing threaded and slip-on flanges, see Table 6C.
(g) Blind flanges may be made with or without hubs at the manufacturer's option.
(h) For reducing welding neck flanges, see para. 6.8.

NOTES:
(1) This dimension is for the large end of the hub, which may be straight or tapered. Taper shall not exceed 7 deg on threaded, slip-on, socket-welding, and lapped flanges.
(2) For welding end bevel, see para. 6.7.
(3) For threads in threaded flanges, see para. 6.9.
(4) To be specified by the purchaser.

Table 17 Templates for Drilling Class 900 Pipe Flanges and Flanged Fittings (20)

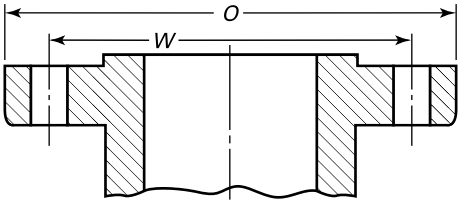

Flange

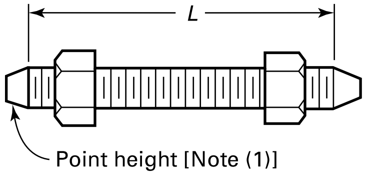

Stud Bolt With Nuts

1	2	3	4	5	6	7	8	9
		Drilling (2), (3)				Length of Bolts, *L* (1), (4)		
Nominal Pipe Size, NPS	Outside Diameter of Flange, *O*	Diameter of Bolt Circle, *W*	Diameter of Bolt Holes, in.	Number of Bolts	Diameter of Bolts, in.	6.4-mm Raised Face	Male and Female/ Tongue and Groove	Ring Joint
½	(5)	(5)	(5)	(5)	(5)	(5)	(5)	(5)
¾	(5)	(5)	(5)	(5)	(5)	(5)	(5)	(5)
1	(5)	(5)	(5)	(5)	(5)	(5)	(5)	(5)
1¼	(5)	(5)	(5)	(5)	(5)	(5)	(5)	(5)
1½	(5)	(5)	(5)	(5)	(5)	(5)	(5)	(5)
2	(5)	(5)	(5)	(5)	(5)	(5)	(5)	(5)
2½	(5)	(5)	(5)	(5)	(5)	(5)	(5)	(5)
3	241	190.5	1	8	⅞	145	140	145
4	292	235.0	1¼	8	1⅛	170	165	170
5	349	279.4	1⅜	8	1¼	190	185	190
6	381	317.5	1¼	12	1⅛	190	185	195
8	470	393.7	1½	12	1⅜	220	215	220
10	546	469.9	1½	16	1⅜	235	230	235
12	610	533.4	1½	20	1⅜	255	250	255
14	641	558.8	1⅝	20	1½	275	265	280
16	705	616.0	1¾	20	1⅝	285	280	290
18	787	685.8	2	20	1⅞	325	320	335
20	857	749.3	2⅛	20	2	350	345	360
24	1,041	901.7	2⅝	20	2½	440	430	455

GENERAL NOTES:
(a) Dimensions are in millimeters, except for diameters of bolts and bolt holes, which are in inches.
(b) For other dimensions, see Tables 18 and 19.

NOTES:
(1) The length of the stud bolt does not include the height of the points (see para 6.10.2).
(2) For flange bolt holes, see para. 6.5.
(3) For spot facing, see para. 6.6.
(4) Bolt lengths not shown in the table may be determined in accordance with Nonmandatory Appendix C (see para. 6.10.2).
(5) Use Class 1500 dimensions in this size.

Table 17C Templates for Drilling Class 900 Pipe Flanges and Flanged Fittings

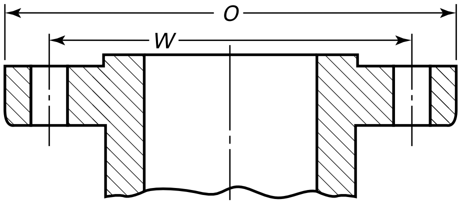

Flange

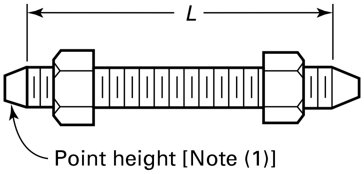

Stud Bolt With Nuts

1	2	3	4	5	6	7	8	9
		Drilling (2), (3)				Length of Bolts, *L* (1), (4)		
Nominal Pipe Size	Outside Diameter of Flange, *O*	Diameter of Bolt Circle, *W*	Diameter of Bolt Holes	Number of Bolts	Diameter of Bolts	Raised Face 0.25 in.	Male and Female/ Tongue and Groove	Ring Joint
1/2	(5)	(5)	(5)	(5)	(5)	(5)	(5)	(5)
3/4	(5)	(5)	(5)	(5)	(5)	(5)	(5)	(5)
1	(5)	(5)	(5)	(5)	(5)	(5)	(5)	(5)
1 1/4	(5)	(5)	(5)	(5)	(5)	(5)	(5)	(5)
1 1/2	(5)	(5)	(5)	(5)	(5)	(5)	(5)	(5)
2	(5)	(5)	(5)	(5)	(5)	(5)	(5)	(5)
2 1/2	(5)	(5)	(5)	(5)	(5)	(5)	(5)	(5)
3	9.50	7.50	1	8	7/8	5.75	5.50	5.75
4	11.50	9.25	1 1/4	8	1 1/8	6.75	6.50	6.75
5	13.75	11.00	1 3/8	8	1 1/4	7.50	7.25	7.50
6	15.00	12.50	1 1/4	12	1 1/8	7.50	7.25	7.75
8	18.50	15.50	1 1/2	12	1 3/8	8.75	8.50	8.75
10	21.50	18.50	1 1/2	16	1 3/8	9.25	9.00	9.25
12	24.00	21.00	1 1/2	20	1 3/8	10.00	9.75	10.00
14	25.25	22.00	1 5/8	20	1 1/2	10.75	10.50	11.00
16	27.75	24.25	1 3/4	20	1 5/8	11.25	11.00	11.50
18	31.00	27.00	2	20	1 7/8	12.75	12.50	13.25
20	33.75	29.50	2 1/8	20	2	13.75	13.50	14.25
24	41.00	35.50	2 5/8	20	2 1/2	17.25	17.00	18.00

GENERAL NOTES:
(a) Dimensions are in inches.
(b) For other dimensions, see Table 18C and Table 19C.

NOTES:
(1) The length of the stud bolt does not include the height of the points (see para. 6.10.2).
(2) For flange bolt holes, see para. 6.5.
(3) For spot facing, see para. 6.6.
(4) Bolt lengths not shown in the table may be determined in accordance with Nonmandatory Appendix C (see para. 6.10.2).
(5) Use Class 1500 dimensions in this size.

Table 18 Dimensions of Class 900 Flanges

(20)

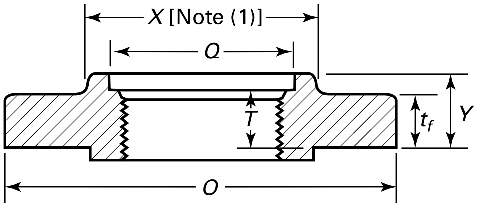

Threaded

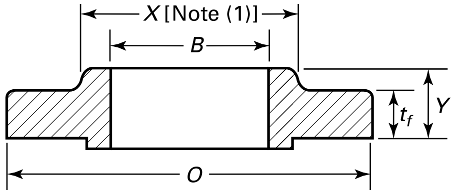

Slip-On Welding

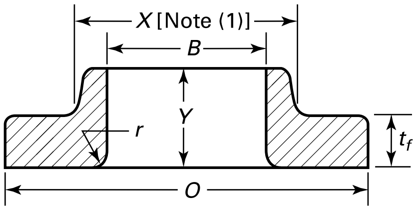

Lapped

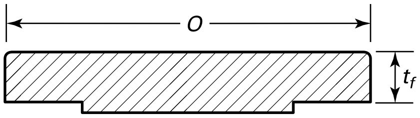

Blind

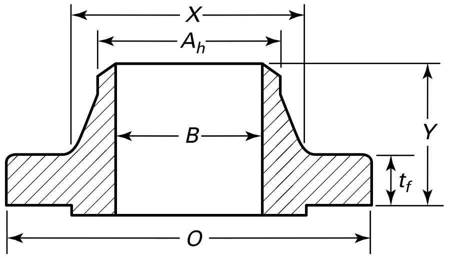

Welding Neck

1	2	3	4	5	6	7	8	9	10	11	12	13	14
					Length Through Hub				Bore				
Nom. Pipe Size, NPS	Outside Diam. of Flange, O	Min. Thick- ness of Flange, t_f	Diam. of Hub, X	Hub Diam. Beginning of Chamfer Welding Neck, A_h (2)	Threaded/ Slip-On, Y	Lapped, Y	Welding Neck, Y	Minimum Thread Length Threaded Flange, T (3)	Min. Slip-On, B	Min. Lapped, B	Welding Neck, B	Corner Bore Radius of Lapped Flange and Pipe, r	Minimum Counter- bore Threaded Flange, Q
½	(4)	(4)	(4)	(4)	(4)	(4)	(4)	(4)	(4)	(4)	(4)	(4)	(4)
¾	(4)	(4)	(4)	(4)	(4)	(4)	(4)	(4)	(4)	(4)	(4)	(4)	(4)
1	(4)	(4)	(4)	(4)	(4)	(4)	(4)	(4)	(4)	(4)	(4)	(4)	(4)
1¼	(4)	(4)	(4)	(4)	(4)	(4)	(4)	(4)	(4)	(4)	(4)	(4)	(4)
1½	(4)	(4)	(4)	(4)	(4)	(4)	(4)	(4)	(4)	(4)	(4)	(4)	(4)
2	(4)	(4)	(4)	(4)	(4)	(4)	(4)	(4)	(4)	(4)	(4)	(4)	(4)
2½	(4)	(4)	(4)	(4)	(4)	(4)	(4)	(4)	(4)	(4)	(4)	(4)	(4)
3	241	38.1	127	88.9	54	54	102	41	90.7	91.4	(5)	10	92.2
4	292	44.5	159	114.3	70	70	114	48	116.1	116.8	(5)	11	117.6
5	349	50.8	190	141.2	79	79	127	54	143.8	144.5	(5)	11	144.5
6	381	55.6	235	168.4	86	86	140	57	170.7	171.4	(5)	13	171.4
8	470	63.5	298	219.2	102	114	162	64	221.5	222.2	(5)	13	222.2
10	546	69.8	368	273.0	108	127	184	71	276.4	277.4	(5)	13	276.4
12	610	79.2	419	323.8	117	143	200	76	327.2	328.2	(5)	13	328.7
14	641	85.9	451	355.6	130	155	213	83	359.2	360.2	(5)	13	360.4

Table 18 Dimensions of Class 900 Flanges (Cont'd)

1	2	3	4	5	6	7	8	9	10	11	12	13	14
					Length Through Hub				Bore				
Nom. Pipe Size, NPS	Outside Diam. of Flange, O	Min. Thick-ness of Flange, t_f	Diam. of Hub, X	Hub Diam. Beginning of Chamfer Welding Neck, A_h (2)	Threaded/ Slip-On, Y	Lapped, Y	Welding Neck, Y	Minimum Thread Length Threaded Flange, T (3)	Min. Slip-On, B	Min. Lapped, B	Welding Neck, B	Corner Bore Radius of Lapped Flange and Pipe, r	Minimum Counter-bore Threaded Flange, Q
16	705	88.9	508	406.4	133	165	216	86	410.5	411.2	(5)	13	411.2
18	787	101.6	565	457.2	152	190	229	89	461.8	462.3	(5)	13	462.0
20	857	108.0	622	508.0	159	210	248	92	513.1	514.4	(5)	13	512.8
24	1,041	139.7	749	609.6	203	267	292	102	616.0	616.0	(5)	13	614.4

GENERAL NOTES:
(a) Dimensions are in millimeters.
(b) For tolerances, see section 7.
(c) For facings, see para. 6.4.
(d) For flange bolt holes, see para. 6.5 and Table 17.
(e) For spot facing, see para 6.6.
(f) For reducing threaded and slip-on flanges, see Table 6.
(g) Blind flanges may be made with or without hubs at the manufacture's option.
(h) For reducing welding neck flanges, see para. 6.8.

NOTES:
(1) This dimension is for the large end of the hub, which may be straight or tapered. Taper shall not exceed 7 deg on threaded, slip-on, socket-welding, and lapped flanges. This dimension is defined as the diameter at the intersection between the hub taper and back face of the flange.
(2) For welding end bevel, see para. 6.7.
(3) For thread of threaded flanges, see para. 6.9.
(4) Use Class 1500 dimensions in this size.
(5) To be specified by the purchaser.

Table 18C Dimensions of Class 900 Flanges

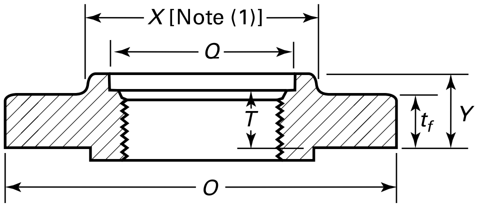

Threaded

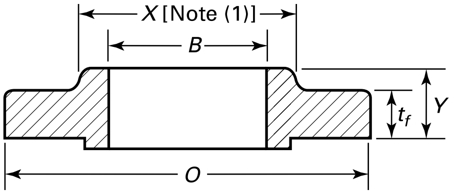

Slip-On Welding

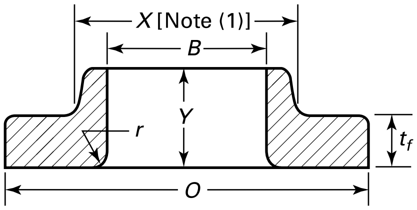

Lapped

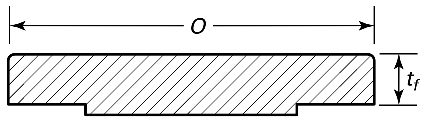

Blind

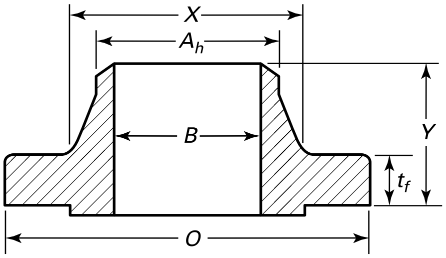

Welding Neck

1	2	3	4	5	6	7	8	9	10	11	12	13	14
					Length Through Hub				Bore				
Nom. Pipe Size	Outside Diameter of Flange, *O*	Minimum Thickness of Flange, t_f	Diam. of Hub, *X*	Hub Diameter Beginning of Chamfer Welding Neck, A_h (2)	Threaded Slip-On, *Y*	Lapped, *Y*	Welding Neck, *Y*	Minimum Thread Length Threaded Flange, *T* (3)	Min. Slip-On, *B*	Min. Lapped, *B*	Welding Neck, *B*	Corner Bore Radius of Lapped Flange and Pipe, *r*	Minimum Counterbore Threaded Flange, *Q*
½	(4)	(4)	(4)	(4)	(4)	(4)	(4)	(4)	(4)	(4)	(4)	(4)	(4)
¾	(4)	(4)	(4)	(4)	(4)	(4)	(4)	(4)	(4)	(4)	(4)	(4)	(4)
1	(4)	(4)	(4)	(4)	(4)	(4)	(4)	(4)	(4)	(4)	(4)	(4)	(4)
1¼	(4)	(4)	(4)	(4)	(4)	(4)	(4)	(4)	(4)	(4)	(4)	(4)	(4)
1½	(4)	(4)	(4)	(4)	(4)	(4)	(4)	(4)	(4)	(4)	(4)	(4)	(4)
2	(4)	(4)	(4)	(4)	(4)	(4)	(4)	(4)	(4)	(4)	(4)	(4)	(4)
2½	(4)	(4)	(4)	(4)	(4)	(4)	(4)	(4)	(4)	(4)	(4)	(4)	(4)
3	9.50	1.50	5.00	3.50	2.12	2.12	4.00	1.62	3.57	3.60	(5)	0.38	3.63
4	11.50	1.75	6.25	4.50	2.75	2.75	4.50	1.88	4.57	4.60	(5)	0.44	4.63
5	13.75	2.00	7.50	5.56	3.12	3.12	5.00	2.12	5.66	5.69	(5)	0.44	5.69
6	15.00	2.19	9.25	6.63	3.38	3.38	5.50	2.25	6.72	6.75	(5)	0.50	6.75
8	18.50	2.50	11.75	8.63	4.00	4.50	6.38	2.50	8.72	8.75	(5)	0.50	8.75
10	21.50	2.75	14.50	10.75	4.25	5.00	7.25	2.81	10.88	10.92	(5)	0.50	10.88
12	24.00	3.12	16.50	12.75	4.62	5.62	7.88	3.00	12.88	12.92	(5)	0.50	12.94
14	25.25	3.38	17.75	14.00	5.12	6.12	8.38	3.25	14.14	14.18	(5)	0.50	14.19

Table 18C Dimensions of Class 900 Flanges (Cont'd)

1	2	3	4	5	6	7	8	9	10	11	12	13	14
					Length Through Hub				Bore				
Nom. Pipe Size	Outside Diameter of Flange, O	Minimum Thickness of Flange, t_f	Diam. of Hub, X	Hub Diameter Beginning of Chamfer Welding Neck, A_h (2)	Threaded Slip-On, Y	Lapped, Y	Welding Neck, Y	Minimum Thread Length Threaded Flange, T (3)	Min. Slip-On, B	Min. Lapped, B	Welding Neck, B	Corner Bore Radius of Lapped Flange and Pipe, r	Minimum Counterbore Threaded Flange, Q
16	27.75	3.50	20.00	16.00	5.25	6.50	8.50	3.38	16.16	16.19	(5)	0.50	16.19
18	31.00	4.00	22.25	18.00	6.00	7.50	9.00	3.50	18.18	18.20	(5)	0.50	18.19
20	33.75	4.25	24.50	20.00	6.25	8.25	9.75	3.62	20.20	20.25	(5)	0.50	20.19
24	41.00	5.50	29.50	24.00	8.00	10.50	11.50	4.00	24.25	24.25	(5)	0.50	24.19

GENERAL NOTES:
(a) Dimensions are in inches.
(b) For tolerances, see section 7.
(c) For facings, see para. 6.4.
(d) For flange bolt holes, see para. 6.5 and Table 17C.
(e) For spot facing, see para. 6.6.
(f) For reducing threaded and slip-on flanges, see Table 6C.
(g) Blind flanges may be made with or without hubs at the manufacturer's option.
(h) For reducing welding neck flanges, see para. 6.8.

NOTES:
(1) This dimension is for the large end of the hub, which may be straight or tapered. Taper shall not exceed 7 deg on threaded, slip-on, socket-welding, and lapped flanges.
(2) For welding end bevel, see para. 6.7.
(3) For threads in threaded flanges, see para. 6.9.
(4) Use Class 1500 dimensions in this size.
(5) To be specified by the purchaser.

Table 19 Templates for Drilling Class 1500 Pipe Flanges (20)

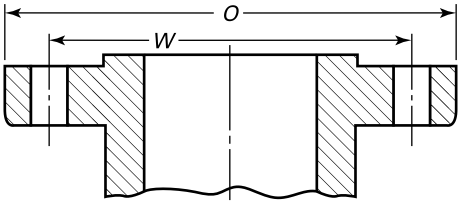

Flange

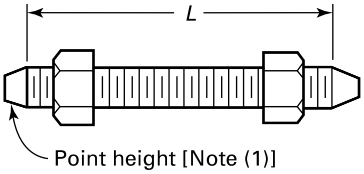

Stud Bolt With Nuts

1	2	3	4	5	6	7	8	9
		Drilling (2), (3)				Length of Bolts, *L* (1), (4)		
Nominal Pipe Size, NPS	Outside Diameter of Flange, *O*	Diameter of Bolt Circle, *W*	Diameter of Bolt Holes, in.	Number of Bolts	Diameter of Bolts, in.	6.4-mm Raised Face	Male and Female/ Tongue and Groove	Ring Joint
½	121	82.6	⅞	4	¾	110	100	110
¾	130	88.9	⅞	4	¾	115	110	115
1	149	101.6	1	4	⅞	125	120	125
1¼	159	111.1	1	4	⅞	125	120	125
1½	178	124.0	1⅛	4	1	140	135	140
2	216	165.1	1	8	⅞	145	140	145
2½	244	190.5	1⅛	8	1	160	150	160
3	267	203.2	1¼	8	1⅛	180	170	180
4	311	241.3	1⅜	8	1¼	195	190	195
5	375	292.1	1⅝	8	1½	250	240	250
6	394	317.5	1½	12	1⅜	260	255	265
8	483	393.7	1¾	12	1⅝	290	285	300
10	584	482.6	2	12	1⅞	335	330	345
12	673	571.5	2⅛	16	2	375	370	385
14	749	635.0	2⅜	16	2¼	405	400	425
16	826	704.8	2⅝	16	2½	445	440	470
18	914	774.7	2⅞	16	2¾	495	490	525
20	984	831.8	3⅛	16	3	540	535	565
24	1 168	990.6	3⅝	16	3½	615	610	650

GENERAL NOTES:
(a) Dimensions are in millimeters, except for the diameters of the bolts and bolt holes, which are in inches.
(b) For other dimensions, see Table 20.

NOTES:
(1) The length of the stud bolt does not include the height of the points (see para. 6.10.2).
(2) For flange bolt holes, see para. 6.5.
(3) For spot facing, see para. 6.6.
(4) Bolt lengths not shown in the table may be determined in accordance with Nonmandatory Appendix C (see para. 6.10.2).

Table 19C Templates for Drilling Class 1500 Pipe Flanges

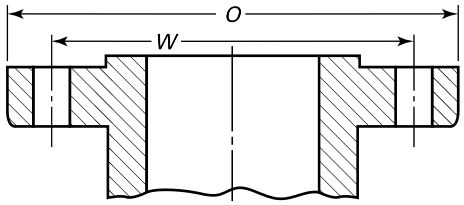

Flange

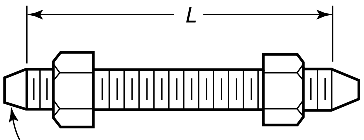

Stud Bolt With Nuts

1	2	3	4	5	6	7	8	9
		Drilling (2), (3)				Length of Bolts, *L* (1), (4)		
Nominal Pipe Size	Outside Diameter of Flange, *O*	Diameter of Bolt Circle, *W*	Diameter of Bolt Holes	Number of Bolts	Diameter of Bolts	Raised Face 0.25 in.	Male and Female/ Tongue and Groove	Ring Joint
1/2	4.75	3.25	7/8	4	3/4	4.25	4.00	4.25
3/4	5.12	3.50	7/8	4	3/4	4.50	4.25	4.50
1	5.88	4.00	1	4	7/8	5.00	4.75	5.00
1 1/4	6.25	4.38	1	4	7/8	5.00	4.75	5.00
1 1/2	7.00	4.88	1 1/8	4	1	5.50	5.25	5.50
2	8.50	6.50	1	8	7/8	5.75	5.50	5.75
2 1/2	9.62	7.50	1 1/8	8	1	6.25	6.00	6.25
3	10.50	8.00	1 1/4	8	1 1/8	7.00	6.75	7.00
4	12.25	9.50	1 3/8	8	1 1/4	7.75	7.50	7.75
5	14.75	11.50	1 5/8	8	1 1/2	9.75	9.50	9.75
6	15.50	12.50	1 1/2	12	1 3/8	10.25	10.00	10.50
8	19.00	15.50	1 3/4	12	1 5/8	11.50	11.25	11.75
10	23.00	19.00	2	12	1 7/8	13.25	13.00	13.50
12	26.50	22.50	2 1/8	16	2	14.75	14.50	15.25
14	29.50	25.00	2 3/8	16	2 1/4	16.00	15.75	16.75
16	32.50	27.75	2 5/8	16	2 1/2	17.50	17.25	18.50
18	36.00	30.50	2 7/8	16	2 3/4	19.50	19.25	20.75
20	38.75	32.75	3 1/8	16	3	21.25	21.00	22.25
24	46.00	39.00	3 5/8	16	3 1/2	24.25	24.00	25.50

GENERAL NOTES:
(a) Dimensions are in inches.
(b) For other dimensions, see Table 20C.

NOTES:
(1) The length of the stud bolt does not include the height of the points (see para. 6.10.2).
(2) For flange bolt holes, see para. 6.5.
(3) For spot facing, see para. 6.6.
(4) Bolt lengths not shown in the table may be determined in accordance with Nonmandatory Appendix C (see para. 6.10.2).

Table 20 Dimensions of Class 1500 Flanges

(20)

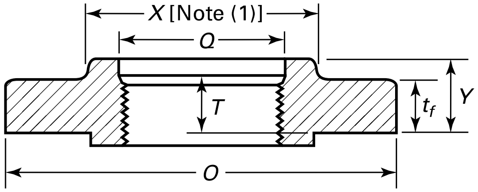

Threaded (NPS 1/2 to 2 1/2 Only)

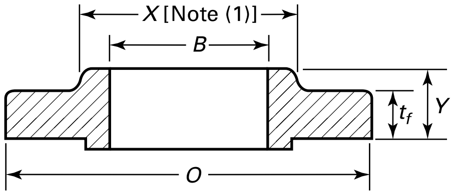

Slip-On Welding (NPS 1/2 to 2 1/2 Only)

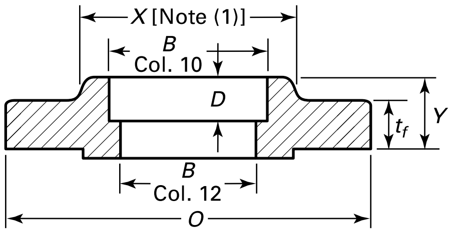

Socket Welding (NPS 1/2 to 2 1/2 Only)

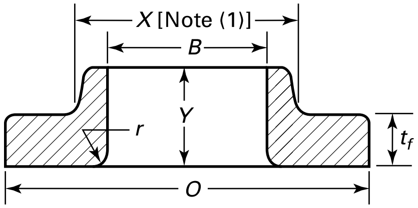

Lapped

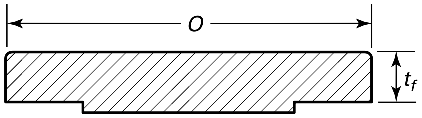

Blind

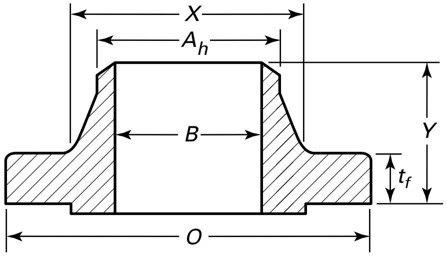

Welding Neck

1	2	3	4	5	6	7	8	9	10	11	12	13	14	15
					Length Through Hub				Bore					
Nominal Pipe Size, NPS	Outside Diameter of Flange, *O*	Minimum Thickness of Flange, t_f	Diameter of Hub, *X*	Hub Diameter Beginning of Chamfer Welding Neck, A_h (2)	Threaded/ Slip-On/ Socket Welding, *Y*	Lapped, *Y*	Welding Neck, *Y*	Minimum Thread Length Threaded Flange, *T* (3)	Minimum Slip-On/ Socket Welding, *B*	Minimum Lapped, *B*	Welding Neck/ Socket Welding, *B*	Corner Bore Radius of Lapped Flange and Pipe, *r*	Minimum Counterbore Threaded Flange, *Q*	Depth of Socket, *D*
1/2	121	22.4	38	21.3	32	32	60	22	22.4	22.9	(4)	3	23.6	10
3/4	130	25.4	44	26.7	35	35	70	25	27.7	28.2	(4)	3	29.0	11
1	149	28.4	52	33.5	41	41	73	28	34.5	35.4	(4)	3	35.8	13
1 1/4	159	28.4	64	42.2	41	41	73	30	43.2	43.7	(4)	5	44.4	14
1 1/2	178	31.8	70	48.3	44	44	83	32	49.5	50.0	(4)	6	50.5	16

Table 20 Dimensions of Class 1500 Flanges (Cont'd)

1	2	3	4	5	6	7	8	9	10	11	12	13	14	15
					Length Through Hub				Bore					
Nominal Pipe Size, NPS	Outside Diameter of Flange, *O*	Minimum Thickness of Flange, t_f	Diameter of Hub, *X*	Hub Diameter Beginning of Chamfer Welding Neck, A_h (2)	Threaded/ Slip-On/ Socket Welding, *Y*	Lapped, *Y*	Welding Neck, *Y*	Minimum Thread Length Threaded Flange, *T* (3)	Minimum Slip-On/ Socket Welding, *B*	Minimum Lapped, *B*	Welding Neck/ Socket Welding, *B*	Corner Bore Radius of Lapped Flange and Pipe, *r*	Minimum Counterbore Threaded Flange, *Q*	Depth of Socket, *D*
2	216	38.1	105	60.5	57	57	102	38	62.0	62.5	(4)	8	63.5	18
2½	244	41.1	124	73.2	64	64	105	48	74.7	75.4	(4)	8	76.2	19
3	267	47.8	133	88.9	...	73	117	...	...	91.4	(4)	10	...	...
4	311	53.8	162	114.3	...	90	124	...	...	116.8	(4)	11	...	...
5	375	73.2	197	141.2	...	105	155	...	...	144.5	(4)	11	...	...
6	394	82.6	229	168.4	...	119	171	...	...	171.4	(4)	13	...	...
8	483	91.9	292	219.2	...	143	213	...	...	222.2	(4)	13	...	...
10	584	108.0	368	273.0	...	178	254	...	...	277.4	(4)	13	...	...
12	673	124.0	451	323.8	...	219	282	...	...	328.2	(4)	13	...	...
14	749	133.4	495	355.6	...	241	298	...	...	360.2	(4)	13	...	...
16	826	146.0	552	406.4	...	260	311	...	...	411.2	(4)	13	...	...
18	914	162.1	597	457.2	...	276	327	...	...	462.3	(4)	13	...	...
20	984	177.8	641	508.0	...	292	356	...	...	514.4	(4)	13	...	
24	1 168	203.2	762	609.6	...	330	406	...	...	616.0	(4)	13	...	...

GENERAL NOTES:

(a) Dimensions are in millimeters.

(b) For tolerances, see section 7.

(c) For facings, see para. 6.4.

(d) For flange bolt holes, see para. 6.5 and Table 19.

(e) For spot facing, see para 6.6.

(f) For reducing threaded and slip-on flanges, see Table 6.

(g) Blind flanges may be made with or without hubs at the manufacturer's option.

(h) For reducing welding neck flanges, see para 6.8.

NOTES:

(1) This dimension is for the large end of the hub, which may be straight or tapered. Taper shall not exceed 7 deg on threaded, slip-on, socket-welding, and lapped flanges. This dimension is defined as the diameter at the intersection between the hub taper and back face of the flange.

(2) For welding end bevel, see para. 6.7.

(3) For thread of threaded flanges, see para. 6.9.

(4) To be specified by the purchaser.

Table 20C Dimensions of Class 1500 Flanges

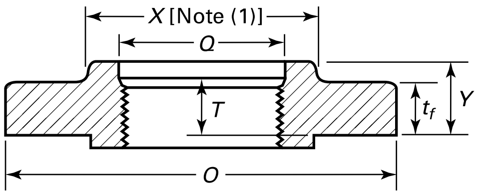

Threaded (NPS $^1/_2$ to $2^1/_2$ Only)

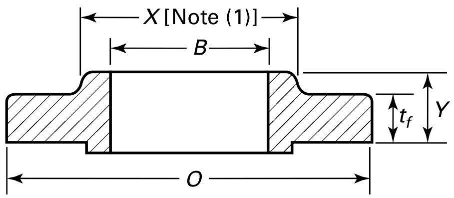

Slip-On Welding (NPS $^1/_2$ to $2^1/_2$ Only)

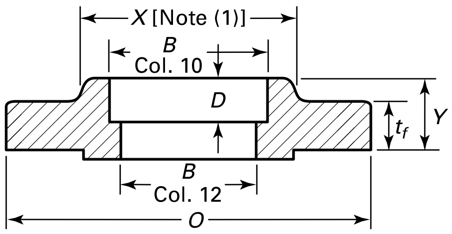

Socket Welding (NPS $^1/_2$ to $2^1/_2$ Only)

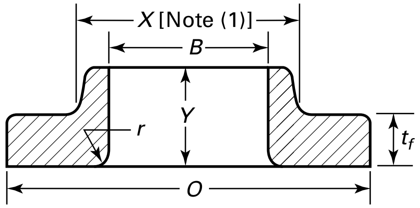

Lapped

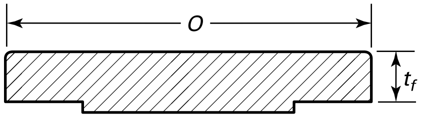

Blind

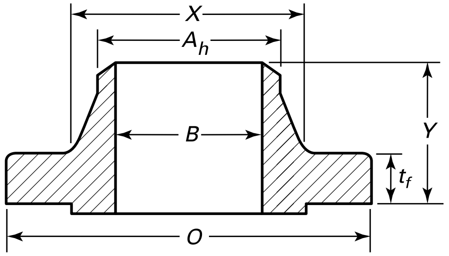

Welding Neck

1	2	3	4	5	6	7	8	9	10	11	12	13	14	15
					Length Through Hub				Bore					
Nominal Pipe Size	Outside Diameter of Flange, *O*	Minimum Thickness of Flange, t_f	Diameter of Hub, *X*	Hub Diameter Beginning of Chamfer Welding Neck, A_h (2)	Threaded Slip-On Socket Welding, *Y*	Lapped *Y*	Welding Neck, *Y*	Minimum Thread Length Threaded Flange, *T* (3)	Minimum Slip-On Socket Welding, *B*	Minimum Lapped, *B*	Welding Neck/ Socket Welding, *B*	Corner Bore Radius of Lapped Flange and Pipe, *r*	Minimum Counterbore Threaded Flange, *Q*	Depth of Socket, *D*
½	4.75	0.88	1.50	0.84	1.25	1.25	2.38	0.88	0.88	0.90	(4)	0.12	0.93	0.38
¾	5.12	1.00	1.75	1.05	1.38	1.38	2.75	1.00	1.09	1.11	(4)	0.12	1.14	0.44
1	5.88	1.12	2.06	1.32	1.62	1.62	2.88	1.12	1.36	1.38	(4)	0.12	1.41	0.50
1¼	6.25	1.12	2.50	1.66	1.62	1.62	2.88	1.19	1.70	1.72	(4)	0.19	1.75	0.56
1½	7.00	1.25	2.75	1.90	1.75	1.75	3.25	1.25	1.95	1.97	(4)	0.25	1.99	0.62
2	8.50	1.50	4.12	2.38	2.25	2.25	4.00	1.50	2.44	2.46	(4)	0.31	2.50	0.69

Table 20C Dimensions of Class 1500 Flanges (Cont'd)

1	2	3	4	5	6	7	8	9	10	11	12	13	14	15
					Length Through Hub				Bore					
Nominal Pipe Size	Outside Diameter of Flange, *O*	Minimum Thickness of Flange, t_f	Diameter of Hub, *X*	Hub Diameter Beginning of Chamfer Welding Neck, A_h (2)	Threaded Slip-On Socket Welding, *Y*	Lapped *Y*	Welding Neck, *Y*	Minimum Thread Length Threaded Flange, *T* (3)	Minimum Slip-On Socket Welding, *B*	Minimum Lapped, *B*	Welding Neck/ Socket Welding, *B*	Corner Bore Radius of Lapped Flange and Pipe, *r*	Minimum Counterbore Threaded Flange, *Q*	Depth of Socket, *D*
2½	9.62	1.62	4.88	2.88	2.50	2.50	4.12	1.88	2.94	2.97	(4)	0.31	3.00	0.75
3	10.50	1.88	5.25	3.50	...	2.88	4.62	...	...	3.60	(4)	0.38	...	...
4	12.25	2.12	6.38	4.50	...	3.56	4.88	...	...	4.60	(4)	0.44	...	...
5	14.75	2.88	7.75	5.56	...	4.12	6.12	...	...	5.69	(4)	0.44	...	...
6	15.50	3.25	9.00	6.63	...	4.69	6.75	...	...	6.75	(4)	0.50	...	...
8	19.00	3.62	11.50	8.63	...	5.62	8.38	...	...	8.75	(4)	0.50	...	...
10	23.00	4.25	14.50	10.75	...	7.00	10.00	...	...	10.92	(4)	0.50	...	...
12	26.50	4.88	17.75	12.75	...	8.62	11.12	...	...	12.92	(4)	0.50	...	...
14	29.50	5.25	19.50	14.00	...	9.50	11.75	...	...	14.18	(4)	0.50	...	...
16	32.50	5.75	21.75	16.00	...	10.25	12.25	...	...	16.19	(4)	0.50	...	...
18	36.00	6.38	23.50	18.00	...	10.88	12.88	...	...	18.20	(4)	0.50	...	...
20	38.75	7.00	25.25	20.00	...	11.50	14.00	...	...	20.25	(4)	0.50	...	...
24	46.00	8.00	30.00	24.00	...	13.00	16.00	...	...	24.25	(4)	0.50	...	...

GENERAL NOTES:
(a) Dimensions are in inches.
(b) For tolerances, see section 7.
(c) For facings, see para. 6.4.
(d) For flange bolt holes, see para. 6.5 and Table 19C.
(e) For spot facing, see para. 6.6.
(f) For reducing threaded and slip-on flanges, see Table 6C.
(g) Blind flanges may be made with or without hubs at the manufacturer's option.
(h) For reducing welding neck flanges, see para. 6.8.

NOTES:
(1) This dimension is for the large end of the hub, which may be straight or tapered. Taper shall not exceed 7 deg on threaded, slip-on, socket-welding, and lapped flanges.
(2) For welding end bevel, see para. 6.7.
(3) For threads in threaded flanges, see para. 6.9.
(4) To be specified by the purchaser.

Table 21 Templates for Drilling Class 2500 Pipe Flanges

(20)

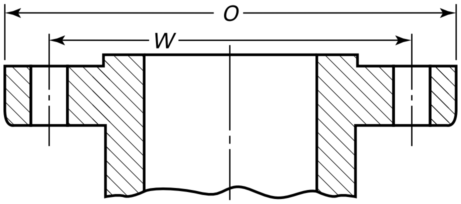

Flange

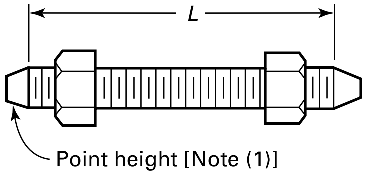

Stud Bolt With Nuts

1	2	3	4	5	6	7	8	9
		Drilling (2), (3)				Length of Bolts, *L* (1), (4)		
Nominal Pipe Size, NPS	Outside Diameter of Flange, *O*	Diameter of Bolt Circle, *W*	Diameter of Bolt Holes, in.	Number of Bolts	Diameter of Bolts, in.	6.4-mm Raised Face	Male and Female/ Tongue and Groove	Ring Joint
1/2	133	88.9	7/8	4	3/4	120	115	120
3/4	140	95.2	7/8	4	3/4	125	120	125
1	159	108.0	1	4	7/8	140	135	140
1 1/4	184	130.0	1 1/8	4	1	150	145	150
1 1/2	203	146.0	1 1/4	4	1 1/8	170	165	170
2	235	171.4	1 1/8	8	1	180	170	180
2 1/2	267	196.8	1 1/4	8	1 1/8	195	190	205
3	305	228.6	1 3/8	8	1 1/4	220	215	230
4	356	273.0	1 5/8	8	1 1/2	255	250	260
5	419	323.8	1 7/8	8	1 3/4	300	290	310
6	483	368.3	2 1/8	8	2	345	335	355
8	552	438.2	2 1/8	12	2	380	375	395
10	673	539.8	2 5/8	12	2 1/2	490	485	510
12	762	619.3	2 7/8	12	2 3/4	540	535	560

GENERAL NOTES:
(a) Dimensions are in millimeters, except for diameters of bolts and bolt holes, which are in inches.
(b) For other dimensions, see Table 22.

NOTES:
(1) The length of the stud bolt does not include the height of the points (see para. 6.10.2).
(2) For flange bolt holes, see para. 6.5.
(3) For spot facing, see para. 6.6.
(4) Bolt lengths not shown in the table may be determined with Nonmandatory Appendix C (see para. 6.10.2).

Table 21C Templates for Drilling Class 2500 Pipe Flanges

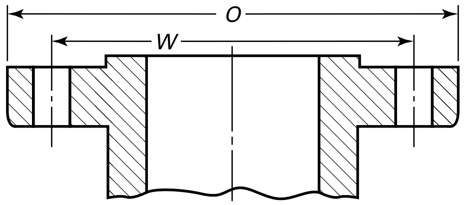

Flange

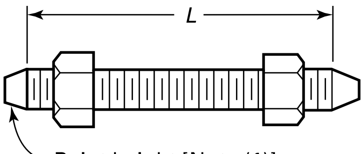

Stud Bolt With Nuts

1	2	3	4	5	6	7	8	9
		Drilling (2), (3)				Length of Bolts, *L* (1), (4)		
Nominal Pipe Size	Outside Diameter of Flange, *O*	Diameter of Bolt Circle, *W*	Diameter of Bolt Holes	Number of Bolts	Diameter of Bolts	Raised Face 0.25 in.	Male and Female/ Tongue and Groove	Ring Joint
½	5.25	3.50	⅞	4	¾	4.75	4.50	4.75
¾	5.50	3.75	⅞	4	¾	5.00	4.75	5.00
1	6.25	4.25	1	4	⅞	5.50	5.25	5.50
1¼	7.25	5.12	1⅛	4	1	6.00	5.75	6.00
1½	8.00	5.75	1¼	4	1⅛	6.75	6.50	6.75
2	9.25	6.75	1⅛	8	1	7.00	6.75	7.00
2½	10.50	7.75	1¼	8	1⅛	7.75	7.50	8.00
3	12.00	9.00	1⅜	8	1¼	8.75	8.50	9.00
4	14.00	10.75	1⅝	8	1½	10.00	9.75	10.25
5	16.50	12.75	1⅞	8	1¾	11.75	11.50	12.25
6	19.00	14.50	2⅛	8	2	13.50	13.25	14.00
8	21.75	17.25	2⅛	12	2	15.00	14.75	15.50
10	26.50	21.25	2⅝	12	2½	19.25	19.00	20.00
12	30.00	24.38	2⅞	12	2¾	21.25	21.00	22.00

GENERAL NOTES:
(a) Dimensions are in inches.
(b) For other dimensions, see Table 22C.

NOTES:
(1) The length of the stud bolt does not include the height of the points (see para. 6.10.2).
(2) For flange bolt holes, see para. 6.5.
(3) For spot facing, see para. 6.6.
(4) Bolt lengths not shown in the table may be determined in accordance with Nonmandatory Appendix C (see para. 6.10.2).

Table 22 Dimensions of Class 2500 Flanges

(20)

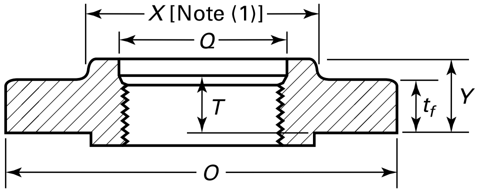

Threaded
(NPS 1/2 to 2 1/2 Only)

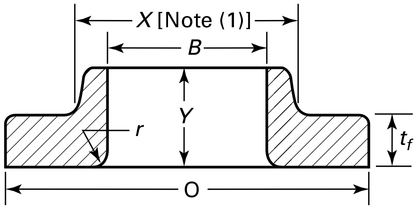

Lapped

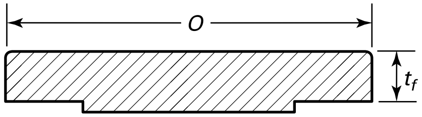

Blind

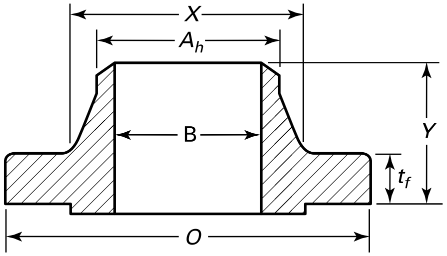

Welding Neck

1	2	3	4	5	6	7	8	9	10	11	12	13
					Length Through Hub				Bore			
Nom. Pipe Size, NPS	Outside Diam. of Flange, *O*	Min. Thickness of Flange, t_f	Diam. of Hub, *X*	Hub Diam. Beginning of Chamfer Welding Neck, A_h (2)	Threaded, *Y*	Lapped, *Y*	Welding Neck, *Y*	Minimum Thread Length Threaded Flange, *T* (3)	Min. Lapped, *B*	Welding Neck, *B*	Corner Bore Radius of Lapped Flange and Pipe, *r*	Minimum Counterbore Threaded Flange, *Q*
½	133	30.2	43	21.3	40	40	73	28	22.9	(4)	3	23.6
¾	140	31.8	51	26.7	43	43	79	32	28.2	(4)	3	29.0
1	159	35.1	57	33.5	48	48	89	35	35.1	(4)	3	35.8
1¼	184	38.1	73	42.2	52	52	95	38	43.7	(4)	5	44.4
1½	203	44.4	79	48.3	60	60	111	44	50.0	(4)	6	50.5
2	235	50.8	95	60.5	70	70	127	51	62.5	(4)	8	63.5
2½	267	57.2	114	73.2	79	79	143	57	75.4	(4)	8	76.2
3	305	66.5	133	88.9	...	92	168	...	91.4	(4)	10	...
4	356	76.2	165	114.3	...	108	190	...	116.8	(4)	11	...
5	419	91.9	203	141.2	...	130	229	...	144.5	(4)	11	...
6	483	108.0	235	168.4	...	152	273	...	171.4	(4)	13	...

Table 22 Dimensions of Class 2500 Flanges (Cont'd)

1	2	3	4	5	6	7	8	9	10	11	12	13
					Length Through Hub				Bore			
Nom. Pipe Size, NPS	**Outside Diam. of Flange, *O***	**Min. Thickness of Flange, t_f**	**Diam. of Hub, *X***	**Hub Diam. Beginning of Chamfer Welding Neck, A_h (2)**	**Threaded, *Y***	**Lapped, *Y***	**Welding Neck, *Y***	**Minimum Thread Length Threaded Flange, *T* (3)**	**Min. Lapped, *B***	**Welding Neck, *B***	**Corner Bore Radius of Lapped Flange and Pipe, *r***	**Minimum Counterbore Threaded Flange, *Q***
8	552	127.0	305	219.2	...	178	318	...	222.2	(4)	13	...
10	673	165.1	375	273.0	...	229	419	...	277.4	(4)	13	...
12	762	184.2	441	323.8	...	254	464	...	328.2	(4)	13	...

GENERAL NOTES:
(a) Dimensions are in millimeters, except for diameters of bolts and bolt holes, which are in inches.
(b) For tolerances, see section 7.
(c) For facings, see para. 6.4.
(d) For flange bolt holes, see para. 6.5 and Table 21.
(e) For spot facing, see para 6.6.
(f) For reducing threaded and slip-on flanges, see Table 6.
(g) Blind flanges may be made with or without hubs at the manufacturer's option.
(h) For reducing welding neck flanges, see para 6.8.

NOTES:
(1) This dimension is for the large end of the hub, which may be straight or tapered. Taper shall not exceed 7 deg on threaded and lapped flanges. This dimension is defined as the diameter at the intersection between the hub taper and back face of the flange.
(2) For welding end bevel, see para. 6.7.
(3) For thread of threaded flanges, see para. 6.9.
(4) To be specified by the purchaser.

Table 22C Dimensions of Class 2500 Flanges

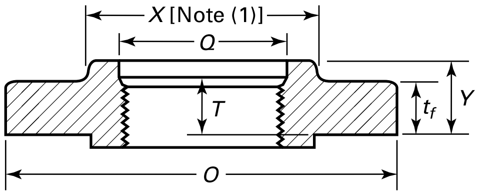

Threaded
(NPS 1/2 to 2 1/2 Only)

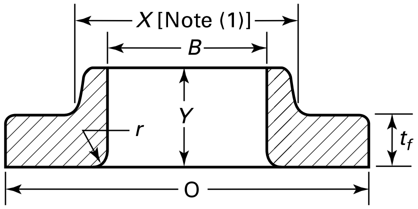

Lapped

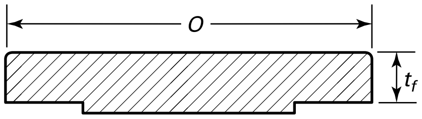

Blind

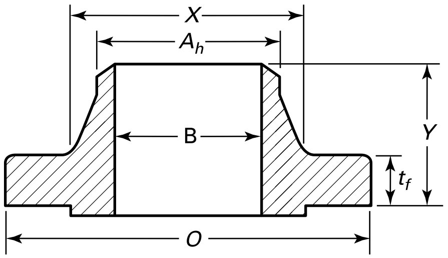

Welding Neck

1	2	3	4	5	6	7	8	9	10	11	12	13
					Length Through Hub				Bore			
Nominal Pipe Size	Outside Diameter of Flange, O	Minimum Thickness of Flange, t_f	Diameter of Hub, X	Hub Diameter Beginning of Chamfer Welding Neck, A_h (2)	Threaded, Y	Lapped, Y	Welding Neck Y	Minimum Thread Length Threaded Flange, T (3)	Minimum Lapped, B	Welding Neck, B	Corner Bore Radius of Lapped Flange and Pipe, r	Minimum Counterbore Threaded Flange, Q
1/2	5.25	1.19	1.69	0.84	1.56	1.56	2.88	1.12	0.90	(4)	0.12	0.93
3/4	5.50	1.25	2.00	1.05	1.69	1.69	3.12	1.25	1.11	(4)	0.12	1.14
1	6.25	1.38	2.25	1.32	1.88	1.88	3.50	1.38	1.38	(4)	0.12	1.41
1 1/4	7.25	1.50	2.88	1.66	2.06	2.06	3.75	1.50	1.72	(4)	0.19	1.75
1 1/2	8.00	1.75	3.12	1.90	2.38	2.38	4.38	1.75	1.97	(4)	0.25	1.99
2	9.25	2.00	3.75	2.38	2.75	2.75	5.00	2.00	2.46	(4)	0.31	2.50
2 1/2	10.50	2.25	4.50	2.88	3.12	3.12	5.62	2.25	2.97	(4)	0.31	3.00
3	12.00	2.62	5.25	3.50	...	3.62	6.62	...	3.60	(4)	0.38	...
4	14.00	3.00	6.50	4.50	...	4.25	7.50	...	4.60	(4)	0.44	...
5	16.50	3.62	8.00	5.56	...	5.12	9.00	...	5.69	(4)	0.44	...
6	19.00	4.25	9.25	6.63	...	6.00	10.75	...	6.75	(4)	0.50	...
8	21.75	5.00	12.00	8.63	...	7.00	12.50	...	8.75	(4)	0.50	...
10	26.50	6.50	14.75	10.75	...	9.00	16.50	...	10.92	(4)	0.50	...
12	30.00	7.25	17.38	12.75	...	10.00	18.25	...	12.92	(4)	0.50	...

Table 22C Dimensions of Class 2500 Flanges (Cont'd)

GENERAL NOTES:
(a) Dimensions are in inches.
(b) For tolerances, see section 7.
(c) For facings, see para. 6.4.
(d) For flange bolt holes, see para. 6.5 and Table 21C.
(e) For spot facing, see para. 6.6.
(f) For reducing threaded and slip-on flanges, see Table 6C.
(g) Blind flanges may be made with or without hubs at the manufacturer's option.
(h) For reducing welding neck flanges, see para. 6.8.

NOTES:
(1) This dimension is for the large end of the hub, which may be straight or tapered. Taper shall not exceed 7 deg on threaded and lapped flanges.
(2) For welding end bevel, see para. 6.7.
(3) For threads in threaded flanges, see para. 6.9.
(4) To be specified by the purchaser.

MANDATORY APPENDIX I
THREADING OF PIPE FOR AMERICAN NATIONAL STANDARD THREADED FLANGES

The length of external taper threads in ASME B1.20.1 is sufficient to provide a satisfactory joint when assembled with corresponding internal taper threads in couplings and fittings. In this Standard, the length of internal thread in Classes 150, 300, and 400 flanges also conforms to ASME B1.20.1.

In Class 600 and higher rated flanges, the length through the hub may exceed the length for internal threads in ASME B1.20.1. Where this occurs, the extended length of internal threads follows the taper of the standard taper threads. Therefore, the diameters of the extra threads are smaller than those shown in ASME B1.20.1.

When threaded flanges conforming to this Standard are assembled with threaded-end pipe, it is intended that the end of the pipe be reasonably close to the mating surface of the flange. To meet this intent, the following requirements are imposed on the mating pipe and external thread:

(a) Pipe to be threaded into flanges of Class 600 or higher rating shall be Schedule 80 or heavier in wall thickness.

(b) The length of external effective thread on the pipe end shall be greater than specified in ASME B1.20.1. When tested with the standard ring gage, the pipe end shall project beyond the gage by the distance specified in Table I-1, subject to a tolerance of one thread pitch as provided in ASME B1.20.1.

(c) The extra threads shall continue the taper specified in ASME B1.20.1, so that the pitch diameter of the thread at the pipe end is less than specified therein.

(d) It is recommended that power equipment be used to assemble threaded joints having longer than standard taper threads, in order to bring the pipe end close to the flange face.

Table I-1 Projection of Threaded Pipe End Through a Ring Gage

NPS	Classes 150, 300, 400 Number of Turns	Class 600 Number of Turns	Class 600 Projection mm	Class 600 Projection in.	Class 900 Number of Turns	Class 900 Projection mm	Class 900 Projection in.	Class 1500 Number of Turns	Class 1500 Projection mm	Class 1500 Projection in.	Class 2500 Number of Turns	Class 2500 Projection mm	Class 2500 Projection in.
1/2	...	(1)	...	...	...	...	...	3 1/2	6.4	0.25	7	12.7	0.50
3/4	...	(1)	...	...	...	...	...	5	9.5	0.38	7	12.7	0.50
1	...	(1)	...	...	...	...	...	5	11.1	0.44	7 1/2	16.5	0.65
1 1/4	...	(1)	...	...	...	...	...	5	11.1	0.44	7 1/2	16.5	0.65
1 1/2	...	(1)	...	...	...	...	...	5	11.1	0.44	7 1/2	16.5	0.65
2	...	(1)	...	...	...	...	11.1	5	11.1	0.44	7 1/2	16.5	0.65
2 1/2	...	...	...	...	...	...	...	5	15.9	0.62	8	25.4	1.00
3	...	1	3.2	0.12	3	9.5	0.38	...	...	...	...	...	...
3 1/2	...	1	3.2	0.12	...	...	...	...	...	...	...	...	...
4	(1)	1 1/2	4.8	0.19	3 1/2	11.1	0.44	...	...	...	...	...	...
5	(1)	1 1/2	4.8	0.19	3 1/2	11.1	0.44	...	...	...	...	...	...
6	(1)	1 1/2	4.8	0.19	3 1/2	11.1	0.44	...	...	...	...	...	...
8	(1)	2	6.4	0.25	4	12.7	0.50	...	...	...	...	...	...
10	(1)	3	9.5	0.38	5	15.9	0.62	...	...	...	...	...	...
12	(1)	3	9.5	0.38	5	15.9	0.62	...	...	...	...	...	...
14	(1)	3	9.5	0.38	6	19.0	0.75	...	...	...	...	...	...
16	(1)	3	9.5	0.38	6	19.0	0.75	...	...	...	...	...	...
18	(1)	3	9.5	0.38	6	19.0	0.75	...	...	...	...	...	...
20	(1)	3	9.5	0.38	6	19.0	0.75	...	...	...	...	...	...
24	(1)	3	9.5	0.38	6	19.0	0.75	...	...	...	...	...	...

NOTE: (1) Use taper pipe thread per ASME B1.20.1 for these sizes.

MANDATORY APPENDIX II
REFERENCES

(20)

The following is a list of standards and specifications referenced in this Standard. Products covered by each ASTM specification are listed for convenience. For ASME Codes and Standards referenced hereunder, up to and including the latest published edition in effect at the time this edition of this Standard is specified, may be used. (See specifications for exact titles and detailed contents.) Materials manufactured to other editions of the referenced ASTM specifications may be used to manufacture flanges and flanged fittings meeting the requirements of this Standard as long as the flange/fitting manufacturer verifies that the material meets the requirements of the referenced edition of the ASTM specification.

ASME B1.1, Unified Inch Screw Threads (UN and UNR Thread Form)
ASME B1.20.1, Pipe Threads, General Purpose (Inch)
ASME B16.20, Metallic Gaskets for Pipe Flanges: Ring-Joint, Spiral-Wound, and Jacketed
ASME B16.21, Nonmetallic Flat Gaskets for Pipe Flanges
ASME B16.25, Buttwelding Ends
ASME B16.34, Valves — Flanged, Threaded, and Welding End
ASME B18.2.1, Square and Hex Bolts and Screws (Inch Series)
ASME B18.2.2, Square and Hex Nuts (Inch Series)
ASME B18.31.2, Continuous Thread Stud, Double-End Stud, and Flange Bolting Stud (Stud Bolt) (Inch Series)
ASME B36.l0M, Welded and Seamless Wrought Steel Pipe
ASME B46.1, Surface Texture (Surface Roughness, Waviness, and Lay)
ASME PCC-1, Guidelines for Pressure Boundary Bolted Flange Joint Assembly
Section I, Power Boilers
Section II, Materials
Section III, Rules for Construction of Nuclear Facility Components
Section VIII, Div. 1 and 2, Pressure Vessels
Section IX, Welding, Brazing, and Fusing Qualifications
Publisher: The American Society of Mechanical Engineers (ASME), Two Park Avenue, New York, NY 10016-5990 (www.asme.org)

ASTM A105/A105M-18, Carbon Steel Forgings for Piping Applications
ASTM A106/A106M-19a, Seamless Carbon Steel Pipe for High-Temperature Service
ASTM A182/A182M-20, Forged or Rolled Alloy and Stainless Steel Pipe Flanges, Forged Fittings, and Valves and Parts for High Temperature Service
ASTM A193/A193M-19, Alloy-Steel and Stainless Steel Bolting for High-Temperature or High-Pressure Service and Other Special Purpose Applications
ASTM A194/A194M-18, Carbon Steel, Alloy Steel, and Stainless Steel Nuts for Bolts for High-Pressure and High-Temperature Service, or Both
ASTM A203/A203M-17, Pressure Vessel Plates, Alloy Steel, Nickel
ASTM A204/A204M-17, Pressure Vessel Plates, Alloy Steel, Molybdenum
ASTM A216/A216M-18, Steel Castings, Carbon, Suitable for Fusion Welding, for High-Temperature Service
ASTM A217/A217M-14, Steel Castings, Martensitic Stainless and Alloy, for Pressure Containing Parts, Suitable for High-Temperature Service
ASTM A240/A240M-19, Chromium and Chromium-Nickel Stainless Steel Plate, Sheet, and Strip for Pressure Vessels and for General Applications
ASTM A307-14e1, Carbon Steel Bolts, Studs, and Threaded Rod 60,000 psi Tensile Strength
ASTM A320/A320M-18, Alloy Steel and Stainless Steel Bolting for Low-Temperature Service
ASTM A350/A350M-18, Carbon and Low-Alloy Steel Forgings, Requiring Notch Toughness Testing for Piping Components
ASTM A351/A351M-18e1, Castings, Austenitic, for Pressure-Containing Parts
ASTM A352/A352M-18a, Steel Castings, Ferritic and Martensitic, for Pressure-Containing Parts, Suitable for Low-Temperature Service
ASTM A354-17e2, Quenched and Tempered Alloy Steel Bolts, Studs, and Other Externally Threaded Fasteners
ASTM A387/A387M-17a, Pressure Vessel Plates, Alloy Steel, Chromium-Molybdenum
ASTM A449-14, Hex Cap Screws, Bolts and Studs, Steel, Heat Treated, 120/105/90 ksi Minimum Tensile Strength, General Use
ASTM A453/A453M-17, High-Temperature Bolting, with Expansion Coefficients Comparable to Austenitic Stainless Steels

ASTM A515/A515M-17, Pressure Vessel Plates, Carbon Steel, for Intermediate- and Higher-Temperature Service

ASTM A516/A516M-17, Pressure Vessel Plates, Carbon Steel, For Moderate- and Lower-Temperature Service

ASTM A537/A537M-20, Pressure Vessel Plates, Heat-Treated, Carbon-Manganese-Silicon Steel

ASTM A540/540M-15, Alloy-Steel Bolting Materials for Special Applications

ASTM A995/A995M-19, Castings, Austenitic-Ferritic (Duplex) Stainless Steel, for Pressure-Containing Parts

ASTM B127-19, Nickel-Copper Alloy Plate, Sheet, and Strip

ASTM B160-05 (2019), Nickel Rod and Bar

ASTM B162-99 (2019) , Nickel Plate, Sheet, and Strip

ASTM B163-19 , Seamless Nickel and Nickel Alloy Condenser and Heat-Exchanger Tubes

ASTM B164-03 (2019), Nickel-Copper Alloy Rod, Bar, and Wire

ASTM B166-19, Nickel-Chromium-Aluminum Alloy, Nickel-Chromium-Iron Alloys, Nickel-Chromium-Cobalt-Molybdenum Alloy, Nickel-Iron-Chromium-Tungsten Alloy, and Nickel-Chromium-Molybdenum-Copper Alloy Rod, Bar, and Wire

ASTM B168-19, Nickel-Chromium-Aluminum Alloys, Nickel-Chromium-Iron Alloys, Nickel-Chromium-Cobalt-Molybdenum Alloy, Nickel-Iron-Chromium-Tungsten Alloy, and Nickel-Chromium-Molybdenum-Copper Alloy Plate, Sheet, and Strip

ASTM B333-03 (2018), Nickel-Molybdenum Alloy Plate, Sheet, and Strip

ASTM B335-18, Nickel-Molybdenum Alloy Rod

ASTM B407-08a (2019), Nickel-Iron-Chromium Alloy Seamless Pipe and Tube

ASTM B408-06 (2016), Nickel-Iron-Chromium Alloy Rod and Bar

ASTM B409-06 (2016), Nickel-Iron-Chromium Alloy, Plate, Sheet, and Strip

ASTM B424-19e1, Nickel-Iron-Chromium-Molybdenum-Copper Alloys Plate, Sheet, and Strip

ASTM B425-19 , Nickel-Iron-Chromium-Molybdenum-Copper Alloys Rod and Bar

ASTM B434-06 (2016), Nickel-Molybdenum-Chromium-Iron Alloys (UNS N10003, UNS N10242) Plate, Sheet, and Strip

ASTM B435-06 (2016), UNS N06002, UNS N06230, UNS N12160, and UNS R30556 Plate, Sheet, and Strip

ASTM B443-19 , Nickel-Chromium-Molybdenum-Columbium Alloy and Nickel-Chromium-Molybdenum-Silicon Alloy Plate, Sheet, and Strip

ASTM B446-19, Nickel-Chromium-Molybdenum-Columbium Alloy (UNS N06625), Nickel-Chromium-Molybdenum-Silicon Alloy (UNS N06219), and Nickel-Chromium-Molybdenum-Tungsten Alloy (UNS N06650) Rod and Bar

ASTM B462-18, Forged or Rolled Nickel Alloy Pipe Flanges, Forged Fittings, and Valves and Parts for Corrosive High-Temperature Service

ASTM B463-10 (2016), UNS N08020 Alloy Plate, Sheet, and Strip

ASTM B473-07 (2018), UNS N08020, UNS N08024, and UNS N08026 Nickel Alloy Bar and Wire

ASTM B511/B511M-16 Nickel-Iron-Chromium-Silicon Alloy Bars and Shapes

ASTM B536-19, Nickel-Iron-Chromium-Silicon Alloy Plate, Sheet, and Strip

ASTM B564-19, Nickel Alloy Forgings

ASTM B572-06 (2016), UNS N06002, UNS N06230, UNS N12160, and UNS R30556 Rod

ASTM B573-06 (2016), Nickel-Molybdenum-Chromium-Iron Alloy (UNS N10003, N10242) Rod

ASTM B574-18, Low-Carbon Nickel-Chromium-Molybdenum, Low-Carbon Nickel-Molybdenum-Chromium, Low-Carbon Nickel-Molybdenum-Chromium-Tantalum, Low-Carbon Nickel-Chromium-Molybdenum-Copper, and Low-Carbon Nickel-Chromium-Molybdenum-Tungsten Alloy Rod

ASTM B575-17, Low-Carbon Nickel-Chromium-Molybdenum, Low-Carbon Nickel-Chromium-Molybdenum-Copper, Low-Carbon Nickel-Chromium-Molybdenum-Tantalum, Low-Carbon Nickel-Chromium-Molybdenum-Tungsten, and Low-Carbon Nickel-Molybdenum-Chromium Alloy Plate, Sheet, and Strip

ASTM B581-17, Nickel-Chromium-Iron-Molybdenum-Copper Alloy Rod

ASTM B582-07 (2018), Nickel-Chromium-Iron-Molybdenum-Copper Alloy Plate, Sheet, and Strip

ASTM B599-20, Nickel-Iron-Chromium-Molybdenum-Niobium Stabilized Alloy (UNS N08700) Plate, Sheet, and Strip

ASTM B620-03 (2018), Nickel-Iron-Chromium-Molybdenum Alloy (UNS N08320) Plate, Sheet, and Strip

ASTM B621-02 (2016), Nickel-Iron-Chromium-Molybdenum Alloy (UNS N08320) Rod

ASTM B625-17, UNS N08925, UNS N08031, UNS N08034, UNS N08932, UNS N08926, UNS N08354, UNS N08830, and UNS R20033 Plate, Sheet, and Strip

ASTM B649-17, Ni-Fe-Cr-Mo-Cu-N Low-Carbon Alloys (UNS N08925, UNS N08031, UNS N08034, UNS N08354, and UNS N08926), and Cr-Ni-Fe-N Low-Carbon Alloy (UNS R20033) Bar and Wire, and Ni-Cr-Fe-Mo-N Alloy (UNS N08936) Wire

ASTM B672-02 (2018), Nickel-Iron-Chromium-Molybdenum-Columbium Stabilized Alloy (UNS N08700) Bar and Wire

ASTM B688-18 (R2004), Chromium-Nickel-Molybdenum-Iron (UNS N08367) Plate, Sheet, and Strip

ASTM E29-13 (2019), Using Significant Digits in Test Data to Determine Conformance with Specifications

Publisher: American Society for Testing and Materials (ASTM International), 100 Barr Harbor Drive, P.O.Box C700, West Conshohocken, PA 19428-2959 (www.astm.org)

ISO 7005-1:1980, Metallic flanges — Part 1: Steel flanges
ISO 9000-1:1994, Quality management and quality assurance standards — Part 1: Guidelines for selection and use
ISO 9000-2:1997, Quality management and quality assurance standard — Part 2: Generic guidelines for the application of ISO 9001, ISO 9002m, and ISO 9003
ISO 9000-3:1997, Quality management and quality assurance standards — Part 3: Guidelines for the application of ISO 9001 to the development, supply, and maintenance of software
ISO 9001:2000, Quality management systems — Requirements
ISO 9002:1994, Quality system — Model for quality assurance in production and servicing
ISO 9003:1994, Quality systems — Model for quality assurance in final inspection and test
Publisher:[1] International Organization for Standardization (ISO), Central Secretariat, Chemin de Blandonnet 8, Case Postale 401, 1214 Vernier, Geneva, Switzerland (www.iso.org)

MSS SP-6-2001, Finishes for Contact Faces of Pipe Flanges and Connecting-End Flanges of Valves and Fittings
MSS SP-9-2001, Spot Facing for Bronze, Iron, and Steel Flanges
MSS SP-25-1998, Standard Marking System for Valves, Fittings, Flanges, and Unions
MSS SP-44-2006, Steel Pipeline Flanges
MSS SP-45-2003, Bypass and Drain Connections
MSS SP-55-2006, Quality Standard for Steel Casting for Valves, Flanges, and Fittings
MSS SP-61-2003, Pressure Testing of Steel Valves
Publisher: Manufacturers Standardization Society of the Valve and Fittings Industry, Inc. (MSS), 127 Park Street, NE, Vienna, VA 22180 (www.msshq.org)

[1] ISO documents are available from the American National Standards Institute (ANSI), 25 West 43rd Street, New York, NY 10036. Publications appearing above, which have been approved as American National Standards, may also be obtained from ANSI.

NONMANDATORY APPENDIX A
METHOD USED FOR ESTABLISHING PRESSURE–TEMPERATURE RATINGS

A-1 GENERAL CONSIDERATIONS

A-1.1 Introduction

Pressure–temperature ratings for this Standard have been determined by the procedures described in this Appendix. These procedures are counterpart to those identified as Standard Class in ASME B16.34. The primary considerations in establishing ratings are component dimensions and material properties to sustain pressure and other loads.[1] Other considerations affecting or limiting ratings include

(a) stresses in flanges resulting from bolt-up necessary to maintain a gasket seal

(b) distortion of flanges and flanged fittings due to loads transmitted through attached piping

(c) limitations applying primarily to flanged components (e.g., valves) but also imposed on flanges in order to preserve compatible ratings

A-1.2 Bolt Cross-Sectional Area

Total flange bolting cross-sectional area requirements are based on the following relationship:

$$A_b \geq \frac{P_c A_g}{7000} \tag{1}$$

where

A_b = total effective bolt tensile stress area

A_g = an area whose circumference is defined by a diameter equal to the raised face dimension R in Table 4

P_c = pressure rating class designation or number (e.g., for Class 150, P_c = 150; for Class 300, P_c = 300)

A-1.3 Flanged Fitting Wall Thickness

Wall thickness requirements for flanged fittings are specified in para. 6.1. The minimum wall thickness values t_m are shown in the tables designated in para. 6.1. These values are all greater than those determined by eq. (2).

$$t = 1.5\left[\frac{P_c d}{2S_F - 1.2P_c}\right] \tag{2}$$

where

d = inside diameter of the fitting

P_c = pressure rating class designation or number (e.g., for Class 150, P_c = 150; for Class 300, P_c = 300)

S_F = stress base constant equal to 7000

t = calculated thickness

The resultant units for t will be the same as those used to express d. Equation (2) results in a fitting wall thickness 50% greater than that for a simple cylinder designed for a stress of 48.28 MPa (7,000 psi) when subjected to an internal pressure equal to the pressure rating class designation P_c. The actual values in the dimension tables referred to in para. 6.1 are approximately 2.5 mm (0.1 in.) larger than those given by the equation.

A-1.4 Material Properties

The pressure–temperature rating method uses allowable stress, ultimate tensile strength, and yield strength values from Section II, Part D of the ASME Boiler and Pressure Vessel Code. For materials listed herein that have ratings either at temperature values that are above those shown in a reference Code Section or that are not listed in any of the reference Code Sections, the allowable stress, ultimate tensile strength, and yield strength data have been provided directly by the ASME Boiler and Pressure Vessel Subcommittee on Materials.

A-1.5 Material Groups

Materials are grouped in Table 1.1-1 based on identical or closely matched allowable stress and yield strength values. When these values are not identical for each material listed, the lowest value has been used. Note that material groups in this Standard are not numbered consecutively. The unlisted numbers, numbers that are not part of this Standard, may be found in the materials tables of ASME B16.34.

[1] This method is appropriate for materials listed in Table 1.1-1. It may not be appropriate for other materials.

A-2 PRESSURE–TEMPERATURE RATING METHOD

A-2.1 Rating Equation Class 300 and Higher

Pressure–temperature ratings for Class 300 and higher components, of materials listed to those in Table 1.1-1, were established by the equation

$$p_t = \frac{C_1 S_1}{8750} P_r \leq p_c \quad (3)$$

where

C_1 = 10 when S_1 is expressed in MPa units and the resultant p_t will be in bar units (C_1 = 1 when S_1 is expressed in psi units and the resultant p_t will be in psi units)

p_c = ceiling pressure, bar (psi), at temperature T as specified in section A-3

P_r = pressure rating class index. For all designations Class 300 and above, P_r is equal to the class designation (e.g., for Class 300, P_r = 300). (For Class 150, see para. A-2.4 of this Nonmandatory Appendix.)

p_t = rated working pressure, bar (psi), for the specified material at temperature T

S_1 = selected stress, MPa (psi) for the specified material at temperature T. The value of S_1 shall be established as described in paras. A-2.2, A-2.3, and A-2.4.

A-2.2 Ratings for Group No. 1 Materials

The selected stress for Group No. 1 materials in Table 1.1-1 is determined as follows:

(a) At temperatures below the creep range, S_1 shall be equal to or less than

(1) 60% of the specified minimum yield strength at 38°C (100°F)

(2) 60% of the yield strength at temperature T

(3) 1.25 times 25% of the ultimate tensile strength value at temperature T, as listed in Section II, Part D of the ASME Boiler and Pressure Vessel Code for either Section I or Section VIII, Division 1

(b) At temperatures in the creep range, the value of S_1 shall be the allowable stress at temperature T, as listed in Section II, Part D of the ASME Boiler and Pressure Vessel Code, for either Section I or Section VIII, Division 1, but not exceeding 60% of the listed yield strength at temperature.

(c) In no case shall the selected stress value increase with increasing temperature.

(d) The creep range is considered to be at temperatures in excess of 370°C (700°F) for Group 1 materials.

(e) When the allowable stresses listed for the reference ASME Boiler and Pressure Vessel Code Section show a higher and lower value for allowable stress and the higher value is noted to the effect that these stress values exceed two-thirds of the yield strength at temperature, then the lower value shall be used. If lower allowable stress values do not appear and it is noted in the allowable stress table that the allowable stress values exceed two-thirds of the yield strength at temperature, then the allowable stress values used shall be determined as two-thirds of the tabulated yield strength at temperature.

(f) Yield strength shall be as listed in Section II, Part D of the ASME Boiler and Pressure Vessel Code, for either Section III or Section VIII, Division 2.

(g) Allowable stress values listed in Section II, Part D of the ASME Boiler and Pressure Vessel Code, for Section III, Class 2 or Class 3 values may only be used for a material not listed for either Section I or Section VIII, Division 1.

A-2.3 Method for Groups 2 and 3 Materials

Pressure–temperature ratings for Class 300 and higher, of materials corresponding to those in Materials Groups 2 and 3 of Table 1.1-1, are established by the method of paras. A-2.1 and A-2.2, except that in paras. A-2.2(a)(1) and A-2.2(a)(2), the 60% factor shall be changed to 70%. For Group 2 materials, the creep range is considered to be at temperatures in excess of 510°C (950°F) unless the material properties indicate lower temperatures should be used. For Group 3 materials, the creep range onset temperature shall be determined on an individual basis.

A-2.4 Method for Class 150 — All Materials

Pressure–temperature ratings for Class 150 rating designation are established by the method given for the related materials in paras. A-2.1, A-2.2, and A-2.3 subject to the following exceptions:

(a) The value of P_r, the pressure class rating index in eq. (3) for Class 150, shall be 115.

(b) The value for S_1, the selected stress MPa (psi), for the specific material at temperature T shall be in accordance with the requirements of either para. A-2.1 or A-2.2, as applicable.

(c) The value of p_t, the rated working pressure bar (psi), for Class 150, shall not exceed values at temperature T as given by eq. (4).

$$p_t \leq C_2 - C_3 T \quad (4)$$

where

C_2 = 21.41

C_3 = 0.03724 with T expressed in °C, the resultant p_t will be in bar units (C_2 = 320 and C_3 = 0.3, with T expressed in °F, the resultant p_t will be in psi units)

T = material temperature, °C (°F)

The value of T in eq. (4) shall not exceed 538°C (1,000°F). For values of T less than 38°C (100°F), use T equal to 38°C (100°F) in eq. (4).

Table A-1 Rating Ceiling Pressure — p_c, bar

Temperature, °C	Class 150	300	400	600	900	1500	2500
−29 to 38	20.0	51.7	68.9	103.4	155.1	258.6	430.9
50	19.5	51.7	68.9	103.4	155.1	258.6	430.9
100	17.7	51.5	68.7	103.0	154.6	257.6	429.4
150	15.8	50.3	66.8	100.3	150.6	250.8	418.2
200	13.8	48.6	64.8	97.2	145.8	243.4	405.4
250	12.1	46.3	61.7	92.7	139.0	231.8	386.2
300	10.2	42.9	57.0	85.7	128.6	214.4	357.1
325	9.3	41.4	55.0	82.6	124.0	206.6	344.3
350	8.4	40.3	53.6	80.4	120.7	201.1	335.3
375	7.4	38.9	51.6	77.6	116.5	194.1	323.2
400	6.5	36.5	48.9	73.3	109.8	183.1	304.9
425	5.5	35.2	46.5	70.0	105.1	175.1	291.6
450	4.6	33.7	45.1	67.7	101.4	169.0	281.8
475	3.7	31.7	42.3	63.4	95.1	158.2	263.9
500	2.8	28.2	37.6	56.5	84.7	140.9	235.0
525	1.9	25.8	34.4	51.6	77.4	129.0	214.9
538	1.4	25.2	33.4	50.0	75.2	125.5	208.9
550	(1)	25.0	33.3	49.8	74.8	124.9	208.0
575	(1)	24.0	31.9	47.9	71.8	119.7	199.5
600	(1)	21.6	28.6	42.9	64.2	107.0	178.5
625	(1)	18.3	24.3	36.6	54.9	91.2	152.0
650	(1)	14.1	18.9	28.1	42.5	70.7	117.7
675	(1)	12.4	16.9	25.2	37.6	62.7	104.5
700	(1)	10.1	13.4	20.0	29.8	49.7	83.0
725	(1)	7.9	10.5	15.4	23.2	38.6	64.4
750	(1)	5.9	7.9	11.7	17.6	29.6	49.1
775	(1)	4.6	6.2	9.0	13.7	22.8	38.0
800	(1)	3.5	4.8	7.0	10.5	17.4	29.2
816	(1)	2.8	3.8	5.9	8.6	14.1	23.8

NOTE: (1) Ratings for flanges and flanged fittings terminate at 538°C (1,000°F).

A-3 MAXIMUM RATINGS

The rules for establishing pressure–temperature ratings include consideration of ceiling pressures p_c that effectively set limits on the selected stress. The ceiling pressure–temperature values set an upper bound for high-strength materials and are imposed to limit deflection. Ceiling pressure values are listed in Tables A-1 and A-2. Ratings in excess of these ceiling values are not permitted under this Standard.

Table A-2 Rating Ceiling Pressure — p_c, psi

Temperature, °F	Class 150	300	400	600	900	1500	2500
−20 to 100	290	750	1,000	1,500	2,250	3,750	6,250
200	260	750	1,000	1,500	2,250	3,750	6,250
300	230	730	970	1,455	2,185	3,640	6,070
400	200	705	940	1,410	2,115	3,530	5,880
500	170	665	885	1,330	1,995	3,325	5,540
600	140	605	805	1,210	1,815	3,025	5,040
650	125	590	785	1,175	1,765	2,940	4,905
700	110	570	755	1,135	1,705	2,840	4,730
750	95	530	710	1,065	1,595	2,660	4,430
800	80	510	675	1,015	1,525	2,540	4,230
850	65	485	650	975	1,460	2,435	4,060
900	50	450	600	900	1,350	2,245	3,745
950	35	385	515	775	1,160	1,930	3,220
1,000	20	365	485	725	1,090	1,820	3,030
1,050	(1)	360	480	720	1,080	1,800	3,000
1,100	(1)	325	430	645	965	1,610	2,685
1,150	(1)	275	365	550	825	1,370	2,285
1,200	(1)	205	275	410	620	1,030	1,715
1,250	(1)	180	245	365	545	910	1,515
1,300	(1)	140	185	275	410	685	1,145
1,350	(1)	105	140	205	310	515	860
1,400	(1)	75	100	150	225	380	630
1,450	(1)	60	80	115	175	290	485
1,500	(1)	40	55	85	125	205	345

NOTE: (1) Ratings of flanges and flanged fittings terminate at 1,000°F (538°C).

NONMANDATORY APPENDIX B LIMITING DIMENSIONS OF GASKETS OTHER THAN RING JOINT GASKETS

B-1 GASKET MATERIALS AND CONSTRUCTION

Classification of gasket materials and types is shown in Table B-1. Other gaskets that result in no increase in bolt loads or flange moment over those resulting from the gaskets included in the respective groups may be used (see para. 5.4).

B-2 GASKET DIMENSIONS

Reference to a dimensional standard for gaskets (e.g., ASME B16.21) is recommended. In any event, selected dimensions should be based on the type of gasket and its characteristics. These characteristics include density, flexibility, compatibility with the fluid being contained, and gasket compression needed to maintain sealing. Consideration should be given to the need for a "pocket" at the gasket inside diameter (between the flange facings) or of intrusion of the gasket into the flange bore. Consideration should also be given to the effects that the contained fluid may have upon the gasket, including damage that may result from partial disintegration of the gasket material.

Table B-1 Gasket Groups and Typical Materials

Gasket Group Number	Gasket Material	Sketches
Ia	Self-energizing types: O-rings, metallic, elastomer, other gasket types considered as self-sealing	
	Elastomer without fabric	
	Compressed sheet suitable for the operating conditions	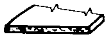
	Fluoropolymer, elastomer with cotton fabric insertion	
	Elastomer with or without wire reinforcement	
	Vegetable fiber	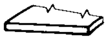
Ib	Spiral-wound metal, with nonmetallic filler	
	Corrugated aluminum, copper or copper alloy, or corrugated aluminum, copper or copper alloy double jacketed with nonmetallic filler	
	Corrugated aluminum, copper, or brass	
IIa and IIb	Corrugated metal or corrugated metal double jacketed with nonmetallic filler	
	Corrugated metal	
	Flat metal jacketed with nonmetallic filler	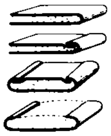
	Grooved metal	
IIIa and IIIb	Solid flat soft aluminum Solid flat metal	
	Ring joint	

NONMANDATORY APPENDIX C
METHOD FOR CALCULATING BOLT LENGTHS[1]

The following equations were used in establishing dimension L as listed in various dimensional tables:

$$L_{CSB} = A + n$$

$$L_{CMB} = B + n$$

For lapped joints, calculate stud bolt and machine bolt length as follows:

(a) For ring joint groove facing

$$L_{CSB} = A + (\text{pipe thickness for each lap}) + n$$

$$L_{CMB} = B + (\text{pipe thickness for each lap}) + n$$

(b) For other than ring joint facing

$$L_{CSB} = A - F + (\text{Table C-1 thickness}) + n$$

$$L_{CMB} = B - F + (\text{Table C-1 thickness}) + n$$

where

A = $2(t_f + t + d) + G + F - a$ (i.e., stud bolt length exclusive of negative length tolerance, n)
a = zero, except where the small female face is on the end of pipe, a = 5 mm (0.19 in.)
B = $2(t_f + t) + d + G + F + p - a$ (i.e., machine bolt length exclusive of negative tolerance, n)
d = heavy nut thickness (equals nominal bolt diameter, see ASME B18.2.2)
F = total height of facings or depth of ring joint groove for both flanges (see Table C-2)
G = 3.0 mm (0.12 in.) gasket thickness for raised face, male and female tongue-and-groove flanges; also approximate distance between ring joint flanges listed in Table 5 (Table 5C)
L_{CMB} = calculated machine bolt length as measured from underside of head to end of point
L_{CSB} = calculated stud bolt length (effective thread length, excluding end points)
L_{SMB} = specified machine bolt length (from underside of head to end, including end point), which is L_{CMB} rounded off to the nearest 5 mm (0.25 in.) increment (see Figure C-1)
L_{SSB} = specified stud bolt length (effective thread length, excluding end points), which is L_{CSB} rounded off to the nearest 5 mm (0.25 in.) increment (see Figure C-2)
n = negative tolerance on bolt length (see Table C-3)
p = allowance for height of point of machine bolt (1.5 times thread pitch)
t = plus tolerance for flange thickness (see para. 7.4)
t_f = minimum flange thickness (see applicable dimensional tables)

Figure C-1 Specified Machine Bolt Length

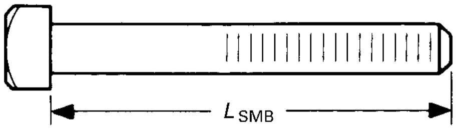

Figure C-2 Specified Stud Bolt Length

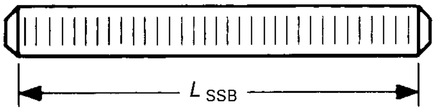

[1] The equations used in this Nonmandatory Appendix are for calculated bolt lengths established to ensure full thread engagement of heavy hexagon nuts when worst case tolerances occur on all relevant dimensions of the flanged joint. The use of shorter bolt lengths is acceptable provided that full thread engagement is obtained at assembly (see para. 6.10.2).

Table C-1 Thickness for Lapped Joints

Lap Combination	Classes 150 Through 2500 Flanges
For lapped to 2 mm (0.06 in.) male face on flange	One lap and 2 mm (0.06 in.)
For lapped to lapped	Both laps
For lapped to 7 mm (0.25 in.) male face on flange	One lap and 7 mm (0.25 in.)
For lapped to female face on flange	One lap not less than 7 mm (0.25 in.)
For male in lap to female in lap	2 × pipe wall with lap for male not less than 7 mm (0.25 in.)

Table C-2 *F* Values

	Total Height of Facings or Depth of Ring Joint Groove for Both Flanges, *F*, mm (in.)			
	Type of Flange Facing (1)			
Class	**2 mm Raised 0.06 in.**	**7 mm Raised 0.25 in.**	**Male and Female or Tongue and Groove**	**Ring Joint**
150 and 300	4 mm (0.12)	14 mm (0.50)	7 mm (0.25)	2 × groove depth
400 to 2500	4 mm (0.12)	14 mm (0.50)	7 mm (0.25)	2 × groove depth

NOTE:
(1) See Figure 7 and Tables 4 and 5 (Tables 4C and 5C).

Table C-3 *n* Values

Dimensions	Negative Tolerance on Bolt Lengths, *n*, mm (in.)	Length, mm (in.)
Stud Bolt		
A	1.5 (0.06)	≤305 (≤12)
or		
[*A* + (pipe thickness for each lap)]	3.0 (0.12)	>305 (>12), ≤460 (≤18)
or		
[*A* − *F* + (Table C-1 thickness)]	7.0 (0.25)	>460 (>18)
Machine Bolt		
B		
or		
[*B* + (pipe thickness for each lap)]	For *n* values, use negative length tolerances per ASME B18.2.1	...
or		
[*B* − *F* + (Table C-1 thickness)]		

NONMANDATORY APPENDIX D
QUALITY SYSTEM PROGRAM

The products manufactured in accordance with this Standard shall be produced under a quality system program following the principles of an appropriate standard from the ISO 9000 series.[1] A determination of the need for registration and/or certification of the product manufacturer's quality system program by an independent organization shall be the responsibility of the manufacturer. The detailed documentation demonstrating program compliance shall be available to the purchaser at the manufacture's facility. A written summary description of the program utilized by the product manufacturer shall be available to the purchaser upon request. The product manufacturer is defined as the entity whose name or trademark appears on the product in accordance with the marking or identification requirements of this Standard.

[1] The series is also available from the American National Standards Institute (ANSI) and the American Society for Quality (ASQ) as American National Standards that are identified by a prefix "Q," replacing the prefix "ISO." Each standard of the series is listed under References in Mandatory Appendix II.

NONMANDATORY APPENDIX E
DIMENSIONS OF CLASSES 400, 600, 900, 1500, AND 2500 FLANGED FITTINGS IN U.S. CUSTOMARY UNITS

This Nonmandatory Appendix contains Tables E-1 through E-5.

Table E-1 Dimensions of Class 400 Flanged Fittings

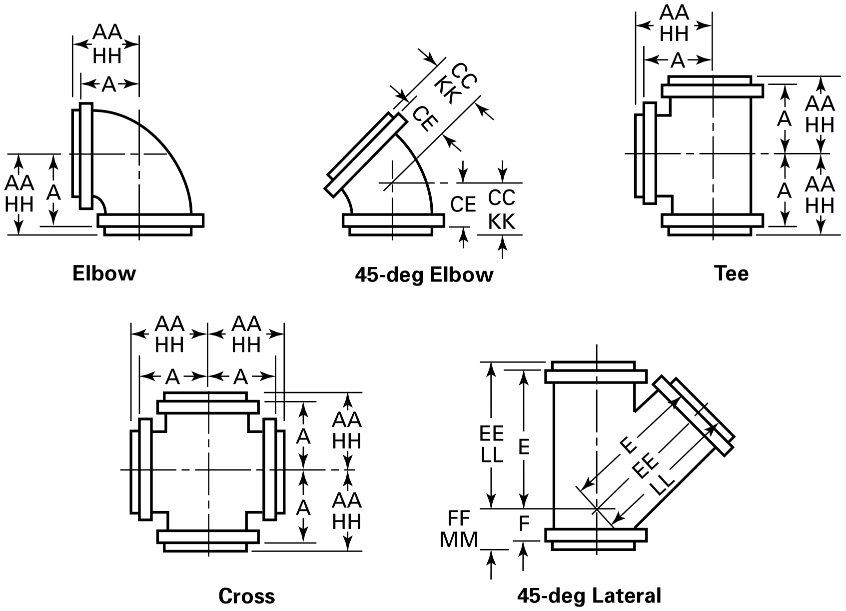

1	2	3	4	5	6	7	8	9	10	11	12	13	14
					Flange Edge					Raised Face 0.25 in. (1)			
Nominal Pipe Size	Outside Diameter of Flange, *O*	Minimum Thickness of Flange, t_f	Minimum Wall Thickness of Fitting, t_m	Inside Diameter of Fitting, *d*	Center-to-Flange Edge, Elbow, Tee, Cross, and True "Y," *A*	Center-to-Flange Edge, 45-deg Elbow, *C*	Long Center-to-Flange Edge, Lateral, *E*	Short Center-to-Flange Edge, Lateral, and True "Y," *F*	Flange Edge-to-Flange Edge, Reducer, *G*	Center-to-Contact Surface of Raised Face Elbow, Tee, Cross, and True "Y," *AA*	Center-to-Contact Surface of Raised Face, 45-deg Elbow, *CC*	Long Center-to-Contact Surface of Raised Face, Lateral, *EE*	Short Center-to-Contact Surface of Raised Face, Lateral, and True "Y," *FF*
½	(9)	(9)	(9)	(9)	(9)	(9)	(9)	(9)	(9)	(9)	(9)	(9)	(9)
¾	(9)	(9)	(9)	(9)	(9)	(9)	(9)	(9)	(9)	(9)	(9)	(9)	(9)
1	(9)	(9)	(9)	(9)	(9)	(9)	(9)	(9)	(9)	(9)	(9)	(9)	(9)
1¼	(9)	(9)	(9)	(9)	(9)	(9)	(9)	(9)	(9)	(9)	(9)	(9)	(9)
1½	(9)	(9)	(9)	(9)	(9)	(9)	(9)	(9)	(9)	(9)	(9)	(9)	(9)
2	(9)	(9)	(9)	(9)	(9)	(9)	(9)	(9)	(9)	(9)	(9)	(9)	(9)
2½	(9)	(9)	(9)	(9)	(9)	(9)	(9)	(9)	(9)	(9)	(9)	(9)	(9)
3	(9)	(9)	(9)	(9)	(9)	(9)	(9)	(9)	(9)	(9)	(9)	(9)	(9)
3½	(9)	(9)	(9)	(9)	(9)	(9)	(9)	(9)	(9)	(9)	(9)	(9)	(9)
4	10.00	1.38	0.38	4.00	7.75	5.25	15.75	4.25	7.75	8.00	5.50	16.00	4.50
5	11.00	1.50	0.44	5.00	8.75	5.75	16.50	4.75	8.75	9.00	6.00	16.75	5.00
6	12.50	1.62	0.44	6.00	9.50	6.00	18.50	5.00	9.50	9.75	6.25	18.75	5.25
8	15.00	1.88	0.56	8.00	11.50	6.50	22.00	5.50	11.50	11.75	6.75	22.25	5.75
10	17.50	2.12	0.69	10.00	13.00	7.50	25.50	6.00	13.00	13.25	7.75	25.75	6.25
12	20.50	2.25	0.75	12.00	14.75	8.50	29.50	6.25	14.75	15.00	8.75	29.75	6.50

Table E-1 Dimensions of Class 400 Flanged Fittings

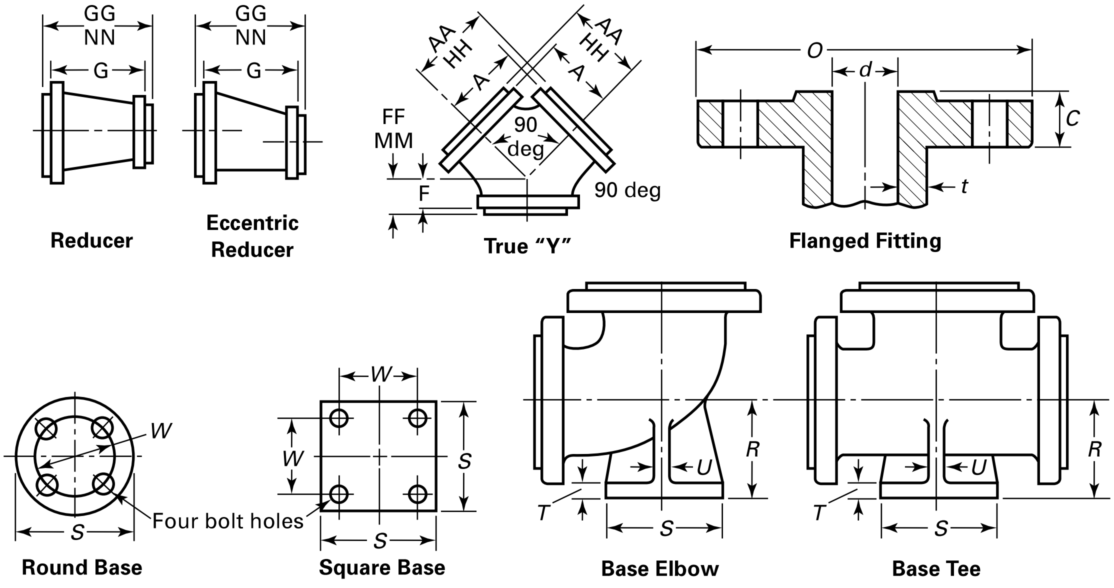

15	16	17	18	19	20	21	22	23	24	25	26	1
Raised Face 0.25 in. (1)	Ring Joint (1)									Base Drilling (8)		
Contact Surface-to-Contact Surface of Raised Face Reducer, *GG* (2)	Center-to-End Elbow, Tee, Cross, and True "Y," *HH* (3)	Center-to-End, 45-deg Elbow, *KK* (3)	Long Center-to-End, Lateral, *LL* (3)	Short Center-to-End, Lateral and True "Y," *MM* (3)	End-to-End Reducer, *NN*	Center-to-Base, *R* (4)–(6)	Diameter of Round Base or Width of Square Base, *S* (4)	Thickness of Base, *T* (4), (7)	Thickness of Ribs, *U* (4)	Bolt Circle or Bolt Spacing, *W*	Diameter of Drilled Holes	Nominal Pipe Size
(9)	(9)	(9)	(9)	(9)	(9)	(9)	(9)	(9)	(9)	(9)	(9)	½
(9)	(9)	(9)	(9)	(9)	(9)	(9)	(9)	(9)	(9)	(9)	(9)	¾
(9)	(9)	(9)	(9)	(9)	(9)	(9)	(9)	(9)	(9)	(9)	(9)	1
(9)	(9)	(9)	(9)	(9)	(9)	(9)	(9)	(9)	(9)	(9)	(9)	1¼
(9)	(9)	(9)	(9)	(9)	(9)	(9)	(9)	(9)	(9)	(9)	(9)	1½
(9)	(9)	(9)	(9)	(9)	(9)	(9)	(9)	(9)	(9)	(9)	(9)	2
(9)	(9)	(9)	(9)	(9)	(9)	(9)	(9)	(9)	(9)	(9)	(9)	2½
(9)	(9)	(9)	(9)	(9)	(9)	(9)	(9)	(9)	(9)	(9)	(9)	3
(9)	(9)	(9)	(9)	(9)	(9)	(9)	(9)	(9)	(9)	(9)	(9)	
8.25	8.06	5.56	16.06	4.56	(2), (3)	6.00	6.50	0.88	0.62	5.00	0.75	4
9.25	9.06	6.06	16.81	5.06	(2), (3)	6.75	7.50	1.00	0.75	5.88	0.88	5
10.00	9.81	6.31	18.81	5.31	(2), (3)	7.50	7.50	1.00	0.75	5.88	0.88	6
12.00	11.81	6.81	22.31	5.81	(2), (3)	9.00	10.00	1.25	0.88	7.88	0.88	8
13.50	13.31	7.81	25.81	6.31	(2), (3)	10.50	10.00	1.25	0.88	7.88	0.88	10
15.25	15.06	8.81	29.81	6.56	(2), (3)	12.00	12.50	1.44	1.00	10.62	0.88	12

Table E-1 Dimensions of Class 400 Flanged Fittings (Cont'd)

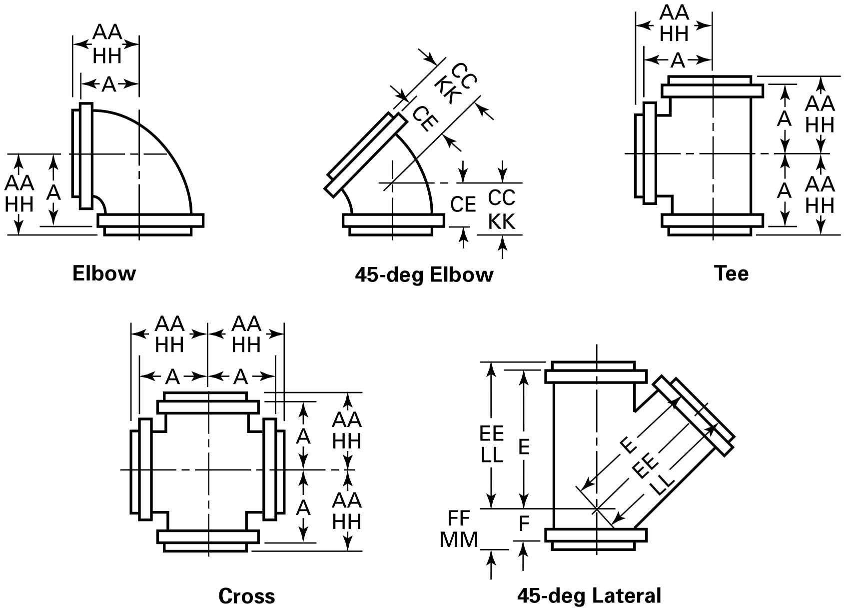

1	2	3	4	5	6	7	8	9	10	11	12	13	14
					Flange Edge					Raised Face 0.25 in. (1)			
Nominal Pipe Size	Outside Diameter of Flange, *O*	Minimum Thickness of Flange, t_f	Minimum Wall Thickness of Fitting, t_m	Inside Diameter of Fitting, *d*	Center-to-Flange Edge, Elbow, Tee, Cross, and True "Y," *A*	Center-to-Flange Edge, 45-deg Elbow, *C*	Long Center-to-Flange Edge, Lateral, *E*	Short Center-to-Flange Edge, Lateral, and True "Y," *F*	Flange Edge-to-Flange Edge, Reducer, *G*	Center-to-Contact Surface of Raised Face Elbow, Tee, Cross, and True "Y," *AA*	Center-to-Contact Surface of Raised Face, 45-deg Elbow, *CC*	Long Center-to-Contact Surface of Raised Face, Lateral, *EE*	Short Center-to-Contact Surface of Raised Face, Lateral, and True "Y," *FF*
14	23.00	2.38	0.81	13.12	16.00	9.00	32.50	6.75	16.00	16.25	9.25	32.75	7.00
16	25.50	2.50	0.88	15.00	17.50	10.00	36.00	7.75	18.00	17.75	10.25	36.25	8.00
18	28.00	2.62	0.94	17.00	19.00	10.50	39.00	8.25	19.00	19.25	10.75	39.25	8.50
20	30.50	2.75	1.06	18.88	20.50	11.00	42.50	8.75	20.50	20.75	11.25	42.75	9.00
24	36.00	3.00	1.19	22.62	24.00	12.50	50.00	10.25	24.00	24.25	12.75	50.25	10.50

Table E-1 Dimensions of Class 400 Flanged Fittings (Cont'd)

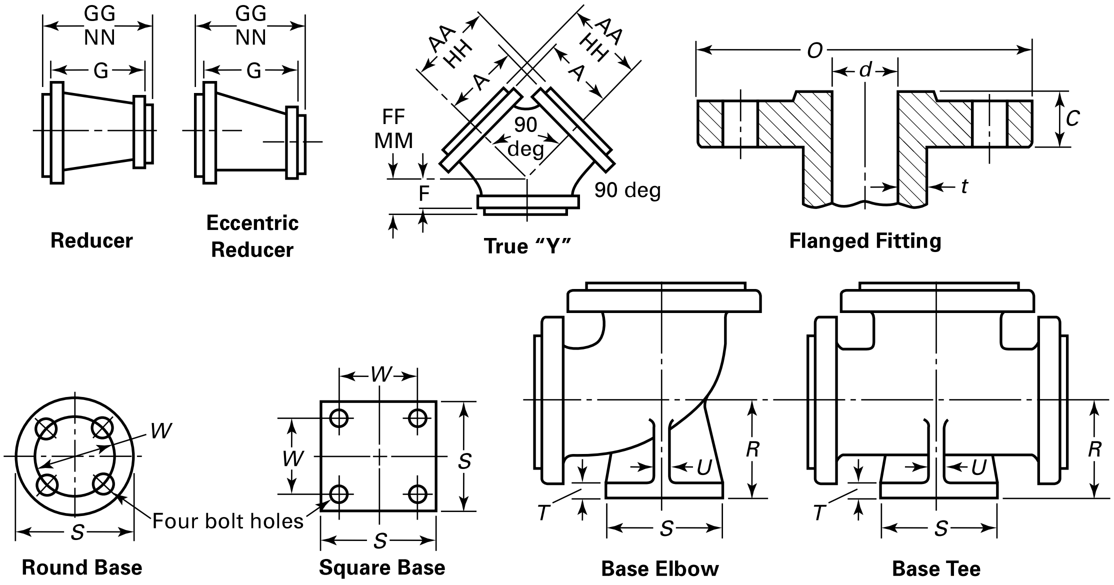

15	16	17	18	19	20	21	22	23	24	25	26	1
Raised Face 0.25 in. (1)	Ring Joint (1)									Base Drilling (8)		
Contact Surface-to-Contact Surface of Raised Face Reducer, *GG* (2)	Center-to-End Elbow, Tee, Cross, and True "Y," *HH* (3)	Center-to-End, 45-deg Elbow, *KK* (3)	Long Center-to-End, Lateral, *LL* (3)	Short Center-to-End, Lateral and True "Y," *MM* (3)	End-to-End Reducer, *NN*	Center-to-Base, *R* (4)–(6)	Diameter of Round Base or Width of Square Base, *S* (4)	Thickness of Base, *T* (4), (7)	Thickness of Ribs, *U* (4)	Bolt Circle or Bolt Spacing, *W*	Diameter of Drilled Holes	Nominal Pipe Size
16.50	16.31	9.31	32.81	7.06	(2), (3)	13.50	12.50	1.44	1.00	10.62	0.88	14
18.50	17.81	10.31	36.31	8.06	(2), (3)	14.75	12.50	1.44	1.12	10.62	0.88	16
19.50	19.31	10.81	39.31	8.56	(2), (3)	16.25	15.00	1.62	1.12	13.00	1.00	18
21.00	20.88	11.38	42.88	9.12	(2), (3)	17.88	15.00	1.62	1.25	13.00	1.00	20
24.50	24.44	12.94	50.44	10.69	(2), (3)	20.75	17.50	1.88	1.25	15.25	1.12	24

Table E-1 Dimensions of Class 400 Flanged Fittings (Cont'd)

GENERAL NOTES:
(a) Dimensions are in inches.
(b) For tolerances, see section 7.
(c) For facings, see para. 6.4.
(d) For flange bolt holes, see para. 6.5 and Table 13C.
(e) For spot facing, see para. 6.6.
(f) For intersecting centerlines, center-to-contact surface, and center-to-end dimensions of side outlet fittings, see para. 6.2.4.
(g) For center-to-contact surface and center-to-end dimensions of special degree elbows, see para. 6.2.5.
(h) For reinforcement of certain fittings, see para. 6.1.
(i) For drains, see para. 6.12.

NOTES:
(1) For center-to-contact surface and center-to-end dimensions of reducing fittings, see para. 6.2.3.
(2) These dimensions apply to straight sizes only (see paras. 6.2.3 and 6.4.2.2). For the center-to-end dimensions of reducing fittings or end-to-end dimensions of reducers, use center-to-flange edge or flange edge-to-flange edge dimensions for largest opening, and add the proper height to provide for ring joint groove applying to each flange. See Table 5C for ring joint facing dimensions.
(3) For contact surface-to-surface and end-to-end dimensions of reducers and eccentric reducers, see para. 6.2.3.
(4) The base dimensions apply to all straight and reducing sizes.
(5) For reducing fittings, the size and center-to-face dimensions of the base are determined by the size of the largest opening of fitting. In the case of reducing base elbows, orders shall specify whether the base shall be opposite the larger or smaller opening.
(6) Bases shall be plain faced unless otherwise specified, and the center-to-base face dimension *R* shall be the finished dimension.
(7) Bases may be cast integral or attached as weldments at the option of the manufacturer.
(8) The bases of these fittings are intended for support in compression and are not to be used for anchors or supports in tension or shear.
(9) Use Class 600 dimensions in this size.

TABLE STARTS ON NEXT PAGE

Table E-2 Dimensions of Class 600 Flanged Fittings

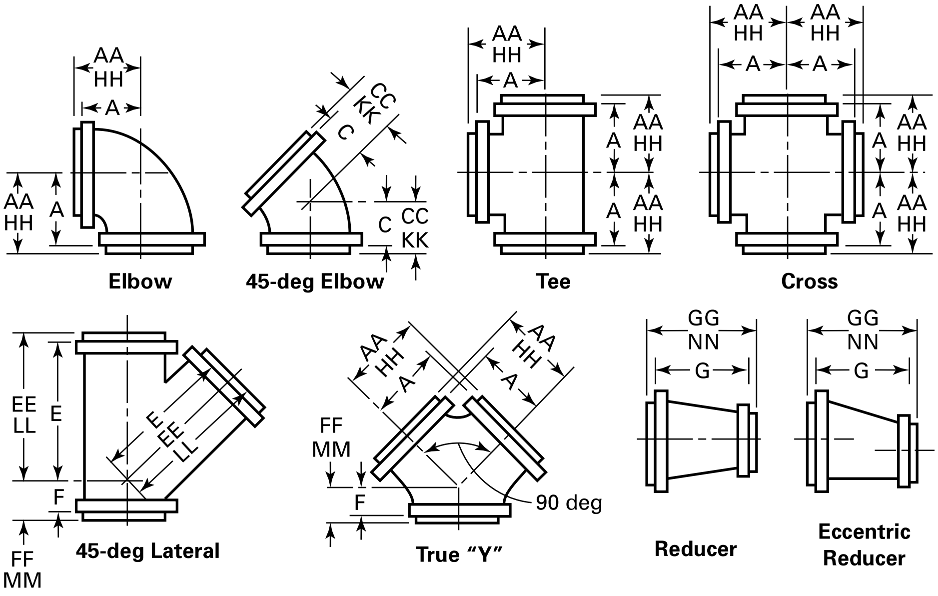

1	2	3	4	5	6	7	8	9	10	11	12	13	14
					Flange Edge					Raised Face 0.25 in. (1)			
Nominal Pipe Size	Outside Diameter of Flange, *O*	Minimum Thickness of Flange, t_m	Minimum Wall Thickness of Fitting, t_m	Inside Diameter of Fitting, *d*	Center-to-Flange Edge, Elbow, Tee, Cross, and True "Y," *A*	Center-to-Flange Edge, 45-deg Elbow, *C*	Long Center-to-Flange Edge, Lateral, *E*	Short Center-to-Flange Edge, Lateral, and True "Y," *F*	Flange Edge-to-Flange Edge, Reducer, *G*	Center-to-Contact Surface of Raised Face, Elbow, Tee, Cross, and True "Y," *AA*	Center-to-Contact Surface of Raised Face, 45-deg Elbow, *CC*	Long Center-to-Contact Surface of Raised Face, Lateral, *EE*	Short Center-to-Contact Surface of Raised Face, Lateral, and True "Y," *FF*
½	3.75	0.56	0.16	0.50	3.00	1.75	5.50	1.50	4.50	3.25	2.00	5.75	1.75
¾	4.62	0.62	0.16	0.75	3.50	2.25	6.50	1.75	4.50	3.75	2.50	6.75	2.00
1	4.88	0.69	0.19	1.00	4.00	2.25	7.00	2.00	4.50	4.25	2.50	7.25	2.25
1¼	5.25	0.81	0.19	1.25	4.25	2.50	7.75	2.25	4.50	4.50	2.75	8.00	2.50
1½	6.12	0.88	0.22	1.50	4.50	2.75	8.75	2.50	4.50	4.75	3.00	9.00	2.75
2	6.50	1.00	0.25	2.00	5.50	4.00	10.00	3.25	5.50	5.75	4.25	10.25	3.50
2½	7.50	1.12	0.28	2.50	6.25	4.25	11.25	3.25	6.25	6.50	4.50	11.50	3.50
3	8.25	1.25	0.31	3.00	6.75	4.75	12.50	3.75	6.75	7.00	5.00	12.75	4.00
3½	9.00	1.38	0.34	3.50	7.25	5.25	13.75	4.25	7.25	7.50	5.50	14.00	4.50
4	10.75	1.50	0.38	4.00	8.25	5.75	16.25	4.25	8.25	8.50	6.00	16.50	4.50
5	13.00	1.75	0.44	5.00	9.75	6.75	19.25	5.75	9.75	10.00	7.00	19.50	6.00
6	14.00	1.88	0.50	6.00	10.75	7.25	20.75	6.25	10.75	11.00	7.50	21.00	6.50
8	16.50	2.19	0.62	7.88	12.75	8.25	24.25	6.75	12.75	13.00	8.50	24.50	7.00
10	20.00	2.50	0.75	9.75	15.25	9.25	29.25	7.75	15.25	15.50	9.50	29.50	8.00
12	22.00	2.62	0.91	11.75	16.25	9.75	31.25	8.25	16.25	16.50	10.00	31.50	8.50
14	23.75	2.75	0.97	12.88	17.25	10.50	34.00	8.75	17.25	17.50	10.75	34.25	9.00

Table E-2 Dimensions of Class 600 Flanged Fittings

15	16	17	18	19	20	21	22	23	24	25	26	1
Raised Face 0.25 in. (1)	Ring Joint (1)									Base Drilling (8)		
Contact Surface-to-Contact Surface of Raised Face Reducer, *GG* (2)	Center-to-End Elbow, Tee, Cross, and True "Y," *HH* (3)	Center-to-End, 45-deg Elbow, *KK* (3)	Long Center-to-End Lateral, *LL* (3)	Short Center-to-End, Lateral, and True "Y," *MM* (3)	End-to-End Reducer, *NN*	Center-to-Base, *R* (4)–(6)	Diameter of Round Base or Width of Square Base, *S* (4)	Thickness of Base, *T* (4), (7)	Thickness of Ribs, *U* (4)	Bolt Circle or Bolt Spacing, *W*	Diameter of Drilled Holes	Nominal Pipe Size
5.00	3.22	1.97	5.72	1.72	(2), (3)	...	...	...	...	...	...	½
5.00	3.75	2.50	6.75	2.00	(2), (3)	...	...	...	...	...	...	¾
5.00	4.25	2.50	7.25	2.25	(2), (3)	...	...	...	...	...	...	1
5.00	4.50	2.75	8.00	2.50	(2), (3)	...	...	...	...	...	...	1¼
5.00	4.75	3.00	9.00	2.75	(2), (3)	...	...	...	...	...	...	1½
6.00	5.81	4.31	10.31	3.56	(2), (3)	4.75	6.12	0.81	0.62	4.50	0.88	2
6.75	6.56	4.56	11.56	3.56	(2), (3)	5.25	6.12	0.81	0.62	4.50	0.88	2½
7.25	7.06	5.06	12.81	4.06	(2), (3)	5.75	6.50	0.88	0.75	5.00	0.75	3
7.75	7.56	5.56	14.06	4.56	(2), (3)	6.50	6.50	0.88	0.75	5.00	0.75	3½
8.75	8.56	6.06	16.56	4.56	(2), (3)	7.00	7.50	1.00	0.75	5.88	0.88	4
10.25	10.06	7.06	19.56	6.06	(2), (3)	8.25	10.00	1.25	0.75	7.88	0.88	5
11.25	11.06	7.56	21.06	6.56	(2), (3)	9.00	10.00	1.25	0.75	7.88	0.88	6
13.25	13.06	8.56	24.56	7.06	(2), (3)	11.00	12.50	1.44	1.00	10.62	0.88	8
15.75	15.56	9.56	29.56	8.06	(2), (3)	12.50	12.50	1.44	1.00	10.62	0.88	10
16.75	16.56	10.06	31.56	8.56	(2), (3)	13.25	15.00	1.62	1.12	13.00	1.00	12
17.75	17.56	10.81	34.31	9.06	(2), (3)	14.75	15.00	1.62	1.12	13.00	1.00	14

Table E-2 Dimensions of Class 600 Flanged Fittings (Cont'd)

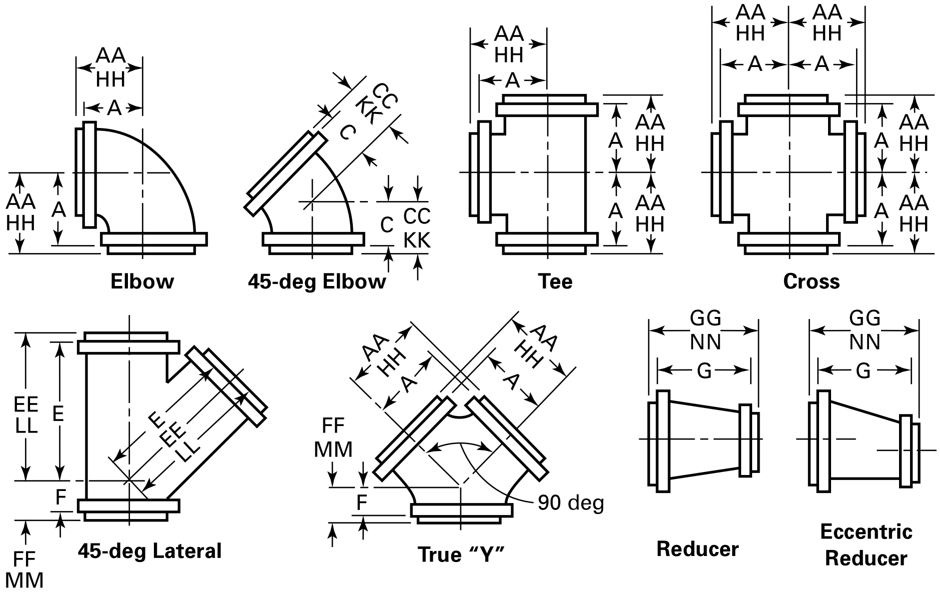

1	2	3	4	5	6	7	8	9	10	11	12	13	14
					Flange Edge					Raised Face 0.25 in. (1)			
Nominal Pipe Size	Outside Diameter of Flange, *O*	Minimum Thickness of Flange, t_m	Minimum Wall Thickness of Fitting, t_m	Inside Diameter of Fitting, *d*	Center-to-Flange Edge, Elbow, Tee, Cross, and True "Y," *A*	Center-to-Flange Edge, 45-deg Elbow, *C*	Long Center-to-Flange Edge, Lateral, *E*	Short Center-to-Flange Edge, Lateral, and True "Y," *F*	Flange Edge-to-Flange Edge, Reducer, *G*	Center-to-Contact Surface of Raised Face, Elbow, Tee, Cross, and True "Y," *AA*	Center-to-Contact Surface of Raised Face, 45-deg Elbow, *CC*	Long Center-to-Contact Surface of Raised Face, Lateral, *EE*	Short Center-to-Contact Surface of Raised Face, Lateral, and True "Y," *FF*
16	27.00	3.00	1.09	14.75	19.25	11.50	38.25	9.75	19.25	19.50	11.75	38.50	10.00
18	29.25	3.25	1.22	16.50	21.25	12.00	41.75	10.25	21.25	21.50	12.25	42.00	10.50
20	32.00	3.50	1.34	18.25	23.25	12.75	45.25	10.75	23.25	23.50	13.00	45.50	11.00
24	37.00	4.00	1.59	22.00	27.25	14.50	52.75	12.75	27.25	27.50	14.75	53.00	13.00

Table E-2 Dimensions of Class 600 Flanged Fittings (Cont'd)

15	16	17	18	19	20	21	22	23	24	25	26	1
Raised Face 0.25 in. (1)	Ring Joint (1)									Base Drilling (8)		
Contact Surface-to-Contact Surface of Raised Face Reducer, *GG* (2)	Center-to-End Elbow, Tee, Cross, and True "Y," *HH* (3)	Center-to-End, 45-deg Elbow, *KK* (3)	Long Center-to-End Lateral, *LL* (3)	Short Center-to-End, Lateral, and True "Y," *MM* (3)	End-to-End Reducer, *NN*	Center-to-Base, *R* (4)–(6)	Diameter of Round Base or Width of Square Base, *S* (4)	Thickness of Base, *T* (4), (7)	Thickness of Ribs, *U* (4)	Bolt Circle or Bolt Spacing, *W*	Diameter of Drilled Holes	Nominal Pipe Size
19.75	19.56	11.81	38.56	10.06	(2), (3)	16.00	15.00	1.62	1.25	13.00	1.00	16
21.75	21.56	12.31	42.06	10.56	(2), (3)	...	...	...	...	...	...	18
23.75	23.62	13.12	45.62	11.12	(2), (3)	...	...	...	...	...	...	20
27.75	27.69	14.94	53.19	13.19	(2), (3)	...	...	...	...	...	...	24

Table E-2 Dimensions of Class 600 Flanged Fittings (Cont'd)

GENERAL NOTES:
(a) Dimensions are in inches.
(b) For tolerances, see section 7.
(c) For facings, see para. 6.4.
(d) For flange bolt holes, see para. 6.5 and Table 15C.
(e) For spot facing, see para. 6.6.
(f) For intersecting centerlines, center-to-contact surface, and center-to-end dimensions of side outlet fittings, see para. 6.2.4.
(g) For center-to-contact surface and center-to-end dimensions of special degree elbows, see para. 6.2.5.
(h) For reinforcement of certain fittings, see para. 6.1.
(i) For drains, see para. 6.12.

NOTES:
(1) For center-to-contact surface and center-to-end dimensions of reducing fittings, see para. 6.2.3.
(2) For contact surface-to-contact surface and end-to-end dimensions of reducers and eccentric reducers, see para. 6.2.3.
(3) These dimensions apply to straight sizes only (see paras. 6.2.3 and 6.4.2.2). For the center-to-end dimensions of reducing fittings or end-to-end dimensions of reducers, use center-to-flange edge or flange edge-to-flange edge dimensions for largest opening, and add the proper height to provide for ring joint groove applying to each flange. See Table 5C for ring joint facing dimensions.
(4) The base dimensions apply to all straight and reducing sizes.
(5) For reducing fittings, the size and center-to-face dimensions of the base are determined by the size of the largest opening of fitting. In the case of reducing base elbows, orders shall specify whether the base shall be opposite the larger or smaller opening.
(6) Bases shall be plain faced unless otherwise specified, and the center-to-base face dimension *R* shall be the finished dimension.
(7) Bases may be cast integral or attached as weldments at the option of the manufacturer.
(8) The bases of these fittings are intended for support in compression and are not to be used for anchors or supports in tension or shear.

TABLE STARTS ON NEXT PAGE

Table E-3 Dimensions of Class 900 Flanged Fittings

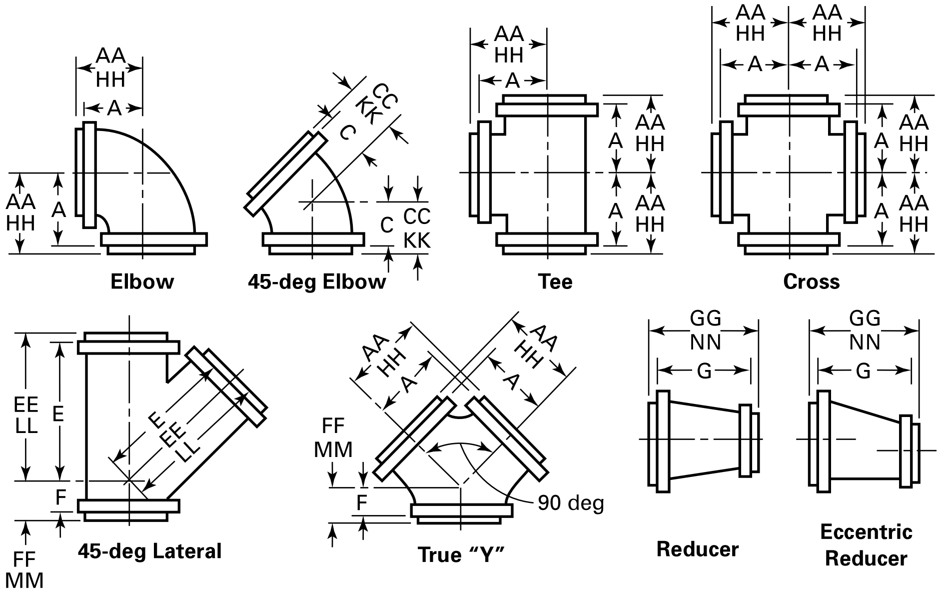

1	2	3	4	5	6	7	8	9	10	11	12	13	14
					Flange Edge					Raised Face 0.25 in. (1)			
Nominal Pipe Size	Outside Diameter of Flange, *O*	Minimum Thickness of Flange, t_f	Minimum Wall Thickness of Fitting, t_m	Inside Diameter of Fitting, *d*	Center-to-Flange Edge, Elbow, Tee, Cross, and True "Y," *A*	Center-to-Flange Edge, 45-deg Elbow, *C*	Long Center-to-Flange Edge, Lateral, *E*	Short Center-to-Flange Edge, Lateral, and True "Y," *F*	Flange Edge-to-Flange Edge, Reducer, *G*	Center-to-Contact Surface of Raised Face Elbow, Tee, Cross, and True "Y," *AA*	Center-to-Contact Surface of Raised Face, 45-deg Elbow, *CC*	Long Center-to-Contact Surface of Raised Face, Lateral, *EE*	Short Center-to-Contact Surface of Raised Face, Lateral, and True "Y," *FF*
½	4.75	0.88	0.16	0.50	(9)	(9)	(9)	(9)	(9)	(9)	(9)	(9)	(9)
¾	5.12	1.00	0.19	0.69	(9)	(9)	(9)	(9)	(9)	(9)	(9)	(9)	(9)
1	5.88	1.12	0.22	0.88	(9)	(9)	(9)	(9)	(9)	(9)	(9)	(9)	(9)
1¼	6.25	1.12	0.25	1.12	(9)	(9)	(9)	(9)	(9)	(9)	(9)	(9)	(9)
1½	7.00	1.25	0.28	1.38	(9)	(9)	(9)	(9)	(9)	(9)	(9)	(9)	(9)
2	8.50	1.50	0.31	1.88	(9)	(9)	(9)	(9)	(9)	(9)	(9)	(9)	(9)
2½	9.62	1.62	0.34	2.25	(9)	(9)	(9)	(9)	(9)	(9)	(9)	(9)	(9)
3	9.50	1.50	0.41	2.88	7.25	5.25	14.25	4.25	7.25	7.50	5.50	14.50	4.50
4	11.50	1.75	0.50	3.88	8.75	6.25	17.25	5.25	8.75	9.00	6.50	17.50	5.50
5	13.75	2.00	0.59	4.75	10.75	7.25	20.75	6.25	10.75	11.00	7.50	21.00	6.50
6	15.00	2.19	0.72	5.75	11.75	7.75	22.25	6.25	11.75	12.00	8.00	22.50	6.50
8	18.50	2.50	0.88	7.50	14.25	8.75	27.25	7.25	14.25	14.50	9.00	27.50	7.50
10	21.50	2.75	1.06	9.38	16.25	9.75	31.25	8.25	16.25	16.50	10.00	31.50	8.50
12	24.00	3.12	1.25	11.12	18.75	10.75	34.25	8.75	17.25	19.00	11.00	34.50	9.00
14	25.25	3.38	1.38	12.25	20.00	11.25	36.25	9.25	18.50	20.25	11.50	36.50	9.50

Table E-3 Dimensions of Class 900 Flanged Fittings

15	16	17	18	19	20	21	22	23	24	25	26	1
Raised Face 0.25 in. (1)	Ring Joint (1)									Base Drilling (8)		
Contact Surface-to-Contact Surface of Raised Face Reducer, *GG* (2)	Center-to-End Elbow, Tee, Cross, and True "Y," *HH* (3)	Center-to-End, 45-deg Elbow, *KK* (3)	Long Center-to-End, Lateral, *LL* (3)	Short Center-to-End, Lateral, and True "Y," *MM* (3)	End-to-End Reducer, *NN*	Center-to-Base, *S* (4), (5)	Diameter of Round Base or Width of Square Base, *S* (6)	Thickness of Base, *T* (6), (7)	Thickness of Ribs, *U* (6)	Bolt Circle or Bolt Spacing, *W*	Diameter of Drilled Holes	Nominal Pipe Size
(9)	(9)	(9)	(9)	(9)	(9)	(9)	(9)	(9)	(9)	(9)	(9)	½
(9)	(9)	(9)	(9)	(9)	(9)	(9)	(9)	(9)	(9)	(9)	(9)	¾
(9)	(9)	(9)	(9)	(9)	(9)	(9)	(9)	(9)	(9)	(9)	(9)	1
(9)	(9)	(9)	(9)	(9)	(9)	(9)	(9)	(9)	(9)	(9)	(9)	1¼
(9)	(9)	(9)	(9)	(9)	(9)	(9)	(9)	(9)	(9)	(9)	(9)	1½
(9)	(9)	(9)	(9)	(9)	(9)	(9)	(9)	(9)	(9)	(9)	(9)	2
(9)	(9)	(9)	(9)	(9)	(9)	(9)	(9)	(9)	(9)	(9)	(9)	2½
7.75	7.56	5.56	14.56	4.56	(2), (3)	5.75	6.50	0.88	0.75	5.00	0.75	3
9.25	9.06	6.56	17.56	5.56	(2), (3)	7.00	7.50	1.00	0.75	5.88	0.88	4
11.25	11.06	7.56	21.06	6.56	(2), (3)	8.25	10.00	1.25	0.75	7.88	0.88	5
12.25	12.06	8.06	22.56	6.56	(2), (3)	9.00	10.00	1.25	0.75	7.88	0.88	6
14.75	14.56	9.06	27.56	7.56	(2), (3)	11.00	12.50	1.44	1.00	10.62	0.88	8
16.75	16.56	10.06	31.56	8.56	(2), (3)	12.50	12.50	1.44	1.00	10.62	0.88	10
17.75	19.06	11.06	34.56	9.06	(2), (3)	13.25	15.00	1.62	1.12	13.00	1.00	12
19.00	20.44	11.69	36.69	9.69	(2), (3)	14.75	15.00	1.62	1.12	13.00	1.00	14

Table E-3 Dimensions of Class 900 Flanged Fittings (Cont'd)

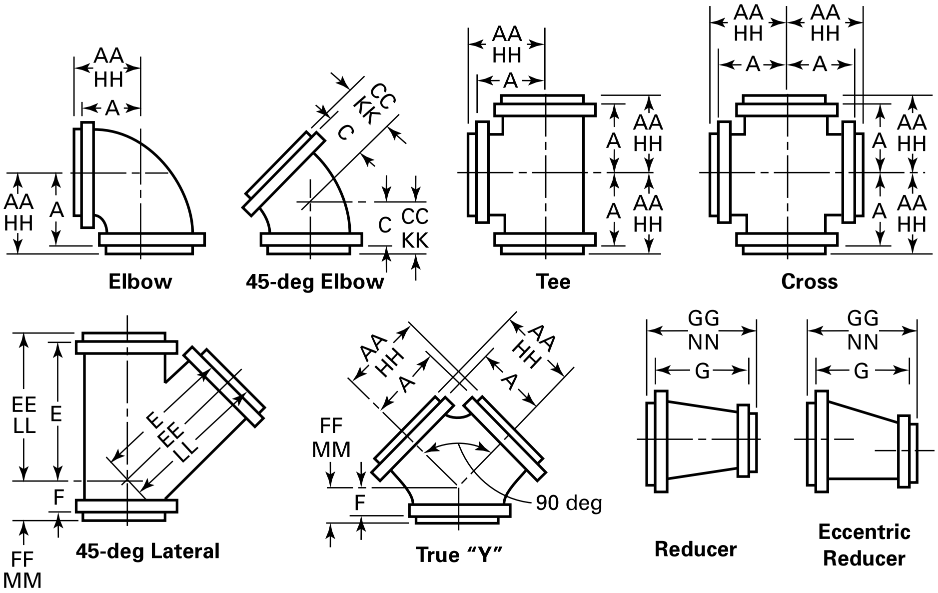

1	2	3	4	5	6	7	8	9	10	11	12	13	14
					Flange Edge					Raised Face 0.25 in. (1)			
Nominal Pipe Size	Outside Diameter of Flange, *O*	Minimum Thickness of Flange, t_f	Minimum Wall Thickness of Fitting, t_m	Inside Diamete-r of Fitting, *d*	Center-to-Flange Edge, Elbow, Tee, Cross, and True "Y," *A*	Center-to-Flange Edge, 45-deg Elbow, *C*	Long Center-to-Flange Edge, Lateral, *E*	Short Center-to-Flange Edge, Lateral, and True "Y," *F*	Flange Edge-to-Flange Edge, Reducer, *G*	Center-to-Contact Surface of Raised Face Elbow, Tee, Cross, and True "Y," *AA*	Center-to-Contact Surface of Raised Face, 45-deg Elbow, *CC*	Long Center-to-Contact Surface of Raised Face, Lateral, *EE*	Short Center-to-Contact Surface of Raised Face, Lateral, and True "Y," *FF*
16	27.75	3.50	1.56	14.00	22.00	12.25	40.50	10.25	20.50	22.25	12.50	40.75	10.25
18	31.00	4.00	1.75	15.75	23.75	13.00	45.25	11.75	24.00	24.00	13.25	45.50	12.00
20	33.75	4.25	1.91	17.50	25.75	14.25	50.00	12.75	26.00	26.00	14.50	50.25	13.00
24	41.00	5.50	2.28	21.00	30.25	17.75	59.75	15.25	30.00	30.50	18.00	60.00	15.50

Table E-3 Dimensions of Class 900 Flanged Fittings (Cont'd)

15	16	17	18	19	20	21	22	23	24	25	26	1
Raised Face 0.25 in. (1)	Ring Joint (1)									Base Drilling (8)		
Contact Surface-to-Contact Surface of Raised Face Reducer, *GG* (2)	Center-to-End Elbow, Tee, Cross, and True "Y," *HH* (3)	Center-to-End, 45-deg Elbow, *KK* (3)	Long Center-to-End, Lateral, *LL* (3)	Short Center-to-End, Lateral, and True "Y," *MM* (3)	End-to-End Reducer, *NN*	Center-to-Base, *S* (4), (5)	Diameter of Round Base or Width of Square Base, *S* (6)	Thickness of Base, *T* (6), (7)	Thickness of Ribs, *U* (6)	Bolt Circle or Bolt Spacing, *W*	Diameter of Drilled Holes	Nominal Pipe Size
21.00	22.44	12.69	40.94	10.69	(2), (3)	16.00	15.00	1.62	1.25	13.00	1.00	16
24.50	24.25	13.50	45.75	12.25	(2), (3)	…	…	…	…	…	…	18
26.50	26.25	14.75	50.50	13.25	(2), (3)	…	…	…	…	…	…	20
30.50	30.88	18.38	60.38	15.88	(2), (3)	…	…	…	…	…	…	24

Table E-3 Dimensions of Class 900 Flanged Fittings (Cont'd)

GENERAL NOTES:
(a) Dimensions are in inches.
(b) For tolerances, see section 7.
(c) For facings, see para. 6.4.
(d) For flange bolt holes, see para. 6.5 and Table 17C.
(e) For spot facing, see para. 6.6.
(f) For intersecting centerlines, center-to-contact surface, and center-to-end dimensions of side outlet fittings, see para. 6.2.4
(g) For center-to-contact surface and center-to-end dimensions of special degree elbows, see para. 6.2.5.
(h) For reinforcement of certain fittings, see para. 6.1.
(i) For drains, see para. 6.12.

NOTES:
(1) For center-to-contact surface and center-to-end dimensions of reducing fittings, see para. 6.2.3.
(2) For contact surface-to-contact surface and center-to-end dimensions of reducers and eccentric reducers, see para. 6.2.3.
(3) These dimensions apply to straight sizes only (see paras. 6.2.3 and 6.4.2.2). For the center-to-end dimensions of reducing fittings or end-to-end dimensions of reducers, use center-to-flange edge or flange edge-to-flange edge dimensions for largest opening, and add the proper height to provide for ring joint groove applying to each flange. See Table 5C for ring joint facing dimensions.
(4) For reducing fittings, the size and center-to-face dimensions of the base are determined by the size of the largest opening fitting. In the case of reducing base elbows, orders shall specify whether the base shall be opposite the larger or smaller opening.
(5) Bases shall be plain faced unless otherwise specified, and the center-to-base face dimension *R* shall be the finished dimension.
(6) The base dimensions apply to all straight and reducing sizes.
(7) Bases may be cast integral or attached as weldments at the option of the manufacturer.
(8) The bases of these fittings are intended for support in compression and are not to be used for anchors or supports in tension or shear.
(9) Use Class 1500 dimensions in this size.

TABLE STARTS ON NEXT PAGE

Table E-4 Dimensions of Class 1500 Flanged Fittings

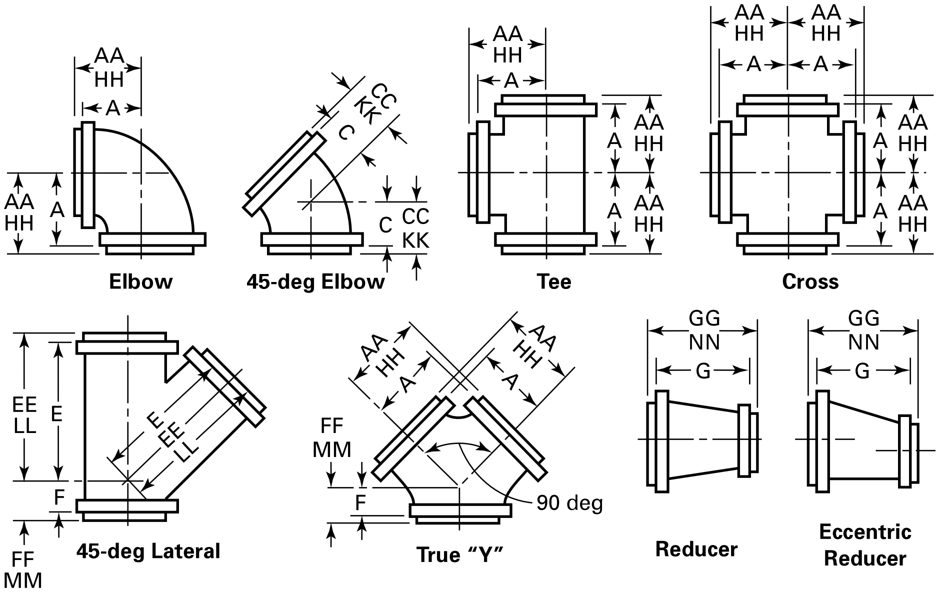

1	2	3	4	5	6	7	8	9	10	11	12	13	14
					Flange Edge					Raised Face 0.25 in. (1)			
Nominal Pipe Size	Outside Diameter of Flange, *O*	Minimum Thickness of Flange, t_f	Minimum Wall Thickness of Fitting, t_m	Inside Diameter of Fitting, *d*	Center-to-Flange Edge, Elbow, Tee, Cross, and True "Y," *A*	Center-to-Flange Edge, 45-deg Elbow, *C*	Long Center-to-Flange Edge, Lateral, *E*	Short Center-to-Flange Edge, Lateral, and True "Y," *F*	Flange Edge to Flange Edge Reducer, *G*	Center-to-Contact Surface of Raised Face, Elbow, Tee, Cross, and True "Y," *AA*	Center-to-Contact Surface of Raised Face, 45-deg Elbow, *CC*	Long Center-to-Contact Surface of Raised Face, Lateral, *EE*	Short Center-to-Contact Surface of Raised Face, Lateral, and True "Y," *FF*
½	4.75	0.88	0.19	0.50	4.00	2.75	...	...	...	4.25	3.00	...	...
¾	5.12	1.00	0.23	0.69	4.25	3.00	...	...	...	4.50	3.25	...	...
1	5.88	1.12	0.26	0.88	4.75	3.25	8.75	2.25	4.50	5.00	3.50	9.00	2.50
1¼	6.25	1.12	0.31	1.12	5.25	3.75	9.75	2.75	5.25	5.50	4.00	10.00	3.00
1½	7.00	1.25	0.38	1.38	5.75	4.00	10.75	3.25	5.75	6.00	4.25	11.00	3.50
2	8.50	1.50	0.44	1.88	7.00	4.50	13.00	3.75	6.75	7.25	4.75	13.25	4.00
2½	9.62	1.62	0.50	2.25	8.00	5.00	15.00	4.25	7.75	8.25	5.25	15.25	4.50
3	10.50	1.88	0.62	2.75	9.00	5.50	17.00	4.75	8.75	9.25	5.75	17.25	5.00
4	12.25	2.12	0.75	3.62	10.50	7.00	19.00	5.75	10.25	10.75	7.25	19.25	6.00
5	14.75	2.88	0.91	4.38	13.00	8.50	23.00	7.25	13.25	13.25	8.75	23.25	7.50
6	15.50	3.25	1.09	5.38	13.62	9.12	24.62	7.88	14.00	13.88	9.38	24.88	8.12
8	19.00	3.62	1.41	7.00	16.12	10.62	29.62	8.88	16.50	16.38	10.88	29.88	9.12
10	23.00	4.25	1.72	8.75	19.25	11.75	35.75	10.00	19.75	19.50	12.00	36.00	10.25
12	26.50	4.88	2.00	10.38	22.00	13.00	40.50	11.75	22.50	22.25	13.25	40.75	12.00
14	29.50	5.25	2.19	11.38	24.50	14.00	43.75	12.25	25.25	24.75	14.25	44.00	12.50
16	32.50	5.75	2.50	13.00	27.00	16.00	48.00	14.50	27.75	27.25	16.25	48.25	14.75

Table E-4 Dimensions of Class 1500 Flanged Fittings

15	16	17	18	19	20	21	22	23	24	25	26	1
Raised Face 0.25 in. (1)	Ring Joint (1)									Base Drilling (8)		
Contact Surface-to-Contact Surface of Raised Face Reducer, *GG* (2)	Center-to-End Elbow, Tee, Cross, and True "Y," *HH* (3)	Center-to-End, 45-deg Elbow, *KK* (3)	Long Center-to-End, Lateral, *LL* (3)	Short Center-to-End, Lateral, and True "Y," *MM* (3)	End-to-End Reducer, *NN*	Center-to-Base, *R* (4)–(6)	Diameter of Round Base or Width of Square Base, *S* (4)	Thickness of Base, *T* (4), (7)	Thickness of Ribs, *U* (4)	Bolt Circle or Bolt Spacing, *W*	Diameter of Drilled Holes	Nominal Pipe Size
...	4.25	3.00	...	...	(2), (3)	...	...	...	...	...	...	½
...	4.50	3.25	...	...	(2), (3)	...	...	...	...	...	...	¾
5.00	5.00	3.50	9.00	2.50	(2), (3)	...	...	...	...	...	...	1
5.75	5.50	4.00	10.00	3.00	(2), (3)	...	...	...	...	...	...	1¼
6.25	6.00	4.25	11.00	3.50	(2), (3)	...	...	...	...	...	...	1½
7.25	7.31	4.81	13.31	4.06	(2), (3)	5.50	6.50	0.88	0.75	5.00	0.75	2
8.25	8.31	5.31	15.31	4.56	(2), (3)	6.00	6.50	0.88	0.75	5.00	0.75	2½
9.25	9.31	5.81	17.31	5.06	(2), (3)	6.50	7.50	1.00	0.75	5.88	0.88	3
10.75	10.81	7.31	19.31	6.06	(2), (3)	7.75	10.00	1.25	0.75	7.88	0.88	4
13.75	13.31	8.81	23.31	7.56	(2), (3)	9.00	10.00	1.25	0.75	7.88	0.88	5
14.50	14.00	9.50	25.00	8.25	(2), (3)	9.75	12.50	1.44	1.00	10.62	0.88	6
17.00	16.56	11.06	30.06	9.31	(2), (3)	11.50	12.50	1.44	1.00	10.62	0.88	8
20.25	19.69	12.19	36.19	10.44	(2), (3)	13.75	15.00	1.62	1.12	13.00	1.00	10
23.00	22.56	13.56	41.06	12.31	(2), (3)	15.50	15.00	1.62	1.12	13.00	1.00	12
25.75	25.12	14.62	44.38	12.88	(2), (3)	17.25	17.50	1.88	1.25	15.25	1.12	14
28.25	27.69	16.69	48.69	15.19	(2), (3)	18.75	17.50	1.88	1.25	15.25	1.12	16

Table E-4 Dimensions of Class 1500 Flanged Fittings (Cont'd)

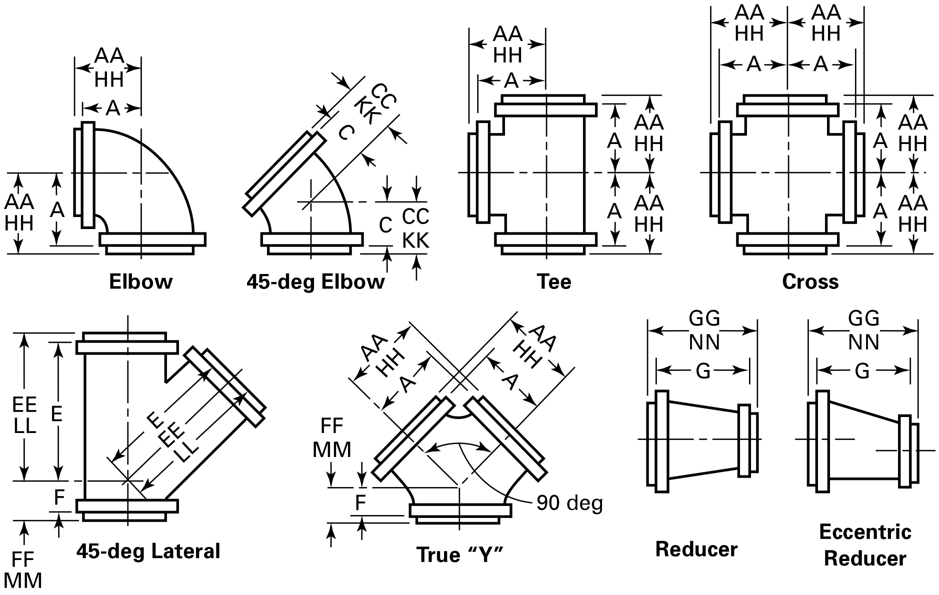

1	2	3	4	5	6	7	8	9	10	11	12	13	14
					Flange Edge					Raised Face 0.25 in. (1)			
Nominal Pipe Size	Outside Diameter of Flange, *O*	Minimum Thickness of Flange, t_f	Minimum Wall Thickness of Fitting, t_m	Inside Diameter of Fitting, *d*	Center-to-Flange Edge, Elbow, Tee, Cross, and True "Y," *A*	Center-to-Flange Edge, 45-deg Elbow, *C*	Long Center-to-Flange Edge, Lateral, *E*	Short Center-to-Flange Edge, Lateral, and True "Y," *F*	Flange Edge to Flange Edge Reducer, *G*	Center-to-Contact Surface of Raised Face, Elbow, Tee, Cross, and True "Y," *AA*	Center-to-Contact Surface of Raised Face, 45-deg Elbow, *CC*	Long Center-to-Contact Surface of Raised Face, Lateral, *EE*	Short Center-to-Contact Surface of Raised Face, Lateral, and True "Y," *FF*
18	36.00	6.38	2.81	14.62	30.00	17.50	53.00	16.25	31.00	30.25	17.75	53.25	16.50
20	38.75	7.00	3.12	16.38	32.50	18.50	57.50	17.50	33.50	32.75	18.75	57.75	17.75
24	46.00	8.00	3.72	19.62	38.00	20.50	67.00	20.25	39.25	38.75	20.75	67.25	20.50

Table E-4 Dimensions of Class 1500 Flanged Fittings (Cont'd)

15	16	17	18	19	20	21	22	23	24	25	26	1
Raised Face 0.25 in. (1)	Ring Joint (1)									Base Drilling (8)		
Contact Surface-to-Contact Surface of Raised Face Reducer, *GG* (2)	Center-to-End Elbow, Tee, Cross, and True "Y," *HH* (3)	Center-to-End, 45-deg Elbow, *KK* (3)	Long Center-to-End, Lateral, *LL* (3)	Short Center-to-End, Lateral, and True "Y," *MM* (3)	End-to-End Reducer, *NN*	Center-to-Base, *R* (4)–(6)	Diameter of Round Base or Width of Square Base, *S* (4)	Thickness of Base, *T* (4), (7)	Thickness of Ribs, *U* (4)	Bolt Circle or Bolt Spacing, *W*	Diameter of Drilled Holes	Nominal Pipe Size
31.50	30.69	18.19	53.69	16.94	(2), (3)	…	…	…	…	…	…	18
34.00	33.19	19.19	58.19	18.19	(2), (3)	…	…	…	…	…	…	20
39.75	38.81	21.31	67.81	21.06	(2), (3)	…	…	…	…	…	…	24

Table E-4 Dimensions of Class 1500 Flanged Fittings (Cont'd)

GENERAL NOTES:
(a) Dimensions are in inches.
(b) For tolerances, see section 7.
(c) For facings, see para. 6.4.
(d) For flange bolt holes, see para. 6.5 and Table 19C.
(e) For spot facing, see para. 6.6.
(f) For intersecting centerlines, center-to-contact surface, and center-to-end dimensions of side outlet fittings, see para. 6.2.4.
(g) For center-to-contact surface and center-to-end dimensions of special degree elbows, see para. 6.2.5.
(h) For reinforcement of certain fittings, see para. 6.1.
(i) For drains, see para. 6.12.

NOTES:
(1) For center-to-contact surface and center-to-end dimensions of reducing fittings, see para. 6.2.3.
(2) For contact surface-to-contact surface and end-to-end dimensions of reducers and eccentric reducers, see para. 6.2.3.
(3) These dimensions apply to straight sizes only (see paras. 6.2.3 and 6.4.2.2). For the center-to-end dimensions of reducing fittings or end-to-end dimensions of reducers, use center-to-flange edge or flange edge-to-flange edge dimensions for largest opening, and add the proper height to provide for ring joint groove applying to each flange. See Table 5C for ring joint facing dimensions.
(4) The base dimensions apply to all straight and reducing sizes.
(5) For reducing fittings, the size and center-to-face dimensions of the base are determined by the size of the largest opening fitting. In the case of reducing base elbows, orders shall specify whether the base shall be opposite the larger or smaller opening.
(6) Bases shall be plain faced unless otherwise specified, and the center-to-base dimension *R* shall be the finished dimension.
(7) Bases may be cast integral or attached as weldments at the option of the manufacturer.
(8) The bases of these fittings are intended for support in compression and are not to be used for anchors or supports in tension or shear.

TABLE STARTS ON NEXT PAGE

Table E-5 Dimensions of Class 2500 Flanged Fittings

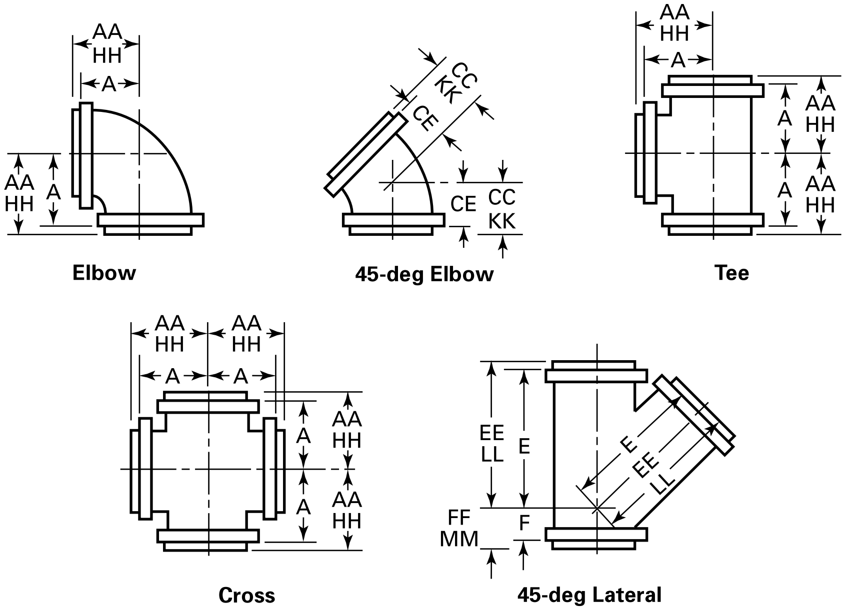

1	2	3	4	5	6	7	8	9	10
					Flange Edge				
Nominal Pipe Size	Outside Diameter of Flange, *O*	Minimum Thickness of Flange, t_f	Minimum Wall Thickness of Fitting, t_m	Inside Diameter of Fitting, *d*	Center-to-Flange Edge, Elbow, Tee, Cross, and True "Y," *A*	Center-to-Flange Edge, 45-deg Elbow, *CE*	Long Center-to-Flange Edge, Lateral, *E*	Short Center-to-Flange Edge, Lateral, and True "Y," *F*	Flange Edge-to-Flange Edge, Reducer, *G*
½	5.25	1.19	0.25	0.44	4.94	...	...	...	...
¾	5.50	1.25	0.28	0.56	5.12	...	...	...	...
1	6.25	1.38	0.34	0.75	5.81	3.75	...	...	...
1¼	7.25	1.50	0.44	1.00	6.62	4.00	...	...	...
1½	8.00	1.75	0.50	1.12	7.31	4.50	...	...	...
2	9.25	2.00	0.62	1.50	8.62	5.50	15.00	5.00	9.00
2½	10.50	2.25	0.75	1.88	9.75	6.00	17.00	5.50	10.00
3	12.00	2.62	0.88	2.25	11.12	7.00	19.50	6.50	11.25
4	14.00	3.00	1.09	2.88	13.00	8.25	22.75	7.50	13.00
5	16.50	3.62	1.34	3.62	15.38	9.75	27.00	9.00	15.25
6	19.00	4.25	1.59	4.38	17.75	11.25	31.00	10.25	17.50
8	21.75	5.00	2.06	5.75	19.88	12.50	35.00	11.50	20.00
10	26.50	6.50	2.59	7.25	24.75	15.75	43.00	14.50	25.00
12	30.00	7.25	3.03	8.62	27.75	17.50	49.00	16.00	28.50

Table E-5 Dimensions of Class 2500 Flanged Fittings

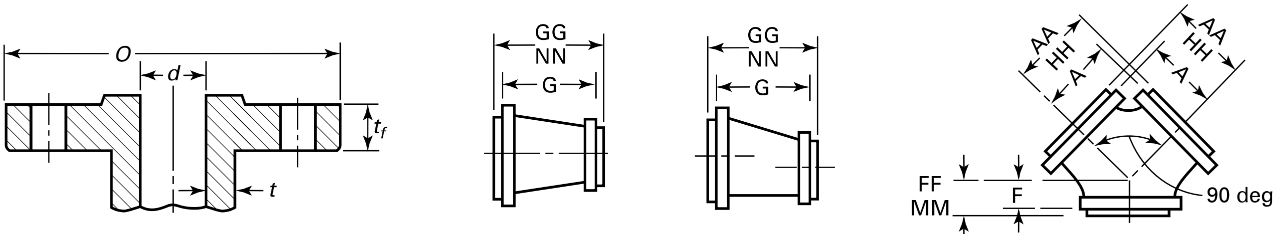

Flanged Fitting   Reducer   Eccentric Reducer   True "Y"

11	12	13	14	15	16	17	18	19	20	1
Raised Face 0.25 in. (1)						Ring Joint (1)				
Center-to-Contact Surface of Raised Face Elbow, Tee, Cross, and True "Y," *AA*	Center-to-Contact Surface of Raised Face 45-deg Elbow, *CC*	Long Center-to-Contact Surface of Raised Face Lateral, *EE*	Short Center-to-Contact Surface of Raised Face Lateral and True "Y," *FF*	Contact Surface-to-Contact Surface of Raised Face Reducer, *GG* (2)	Center-to-End, Elbow, Tee, Cross, and True "Y," *HH* (3)	Center-to-End, 45-deg Elbow, *KK* (3)	Long Center-to-End Lateral, *LL* (3)	Short Center-to-End Lateral and True "Y," *MM* (3)	End-to-End Reducer, *NN* (2), (3)	Nominal Pipe Size
5.19	...	...	...	...	5.19	...	...	...	...	½
5.37	...	...	...	...	5.19	...	...	...	...	¾
6.06	4.00	...	...	...	6.06	4.00	...	...	...	1
6.87	4.25	...	...	...	6.94	4.31	...	...	...	1¼
7.56	4.75	...	...	...	7.62	4.81	...	...	...	1½
8.87	5.75	15.25	5.25	9.50	8.94	5.81	15.31	5.31	...	2
10.00	6.25	17.25	5.75	10.50	10.12	6.38	17.38	5.88	...	2½
11.37	7.25	19.75	6.75	11.75	11.50	7.38	19.88	6.88	...	3
13.25	8.50	23.00	7.75	13.50	13.44	8.69	23.19	7.94	...	4
15.62	10.00	27.25	9.25	15.75	15.88	10.25	27.50	9.50	...	5
18.00	11.50	31.25	10.50	18.00	18.25	11.75	31.50	10.75	...	6
20.12	12.75	35.25	11.75	20.50	20.44	13.06	35.56	12.06	...	8
25.00	16.00	43.25	14.75	25.50	25.44	16.44	43.69	15.19	...	10
28.00	17.75	49.25	16.25	29.00	28.44	18.19	49.69	16.62	...	12

Table E-5 Dimensions of Class 2500 Flanged Fittings (Cont'd)

GENERAL NOTES:
(a) Dimensions are in inches.
(b) For tolerances, see section 7.
(c) For facings, see para. 6.4.
(d) For flange bolt holes, see para. 6.5 and Table 21C.
(e) For spot facing, see para. 6.6.
(f) For intersecting centerlines, center-to-contact surface, and center-to-end dimensions of side outlet fittings, see para. 6.2.4.
(g) For center-to-contact surface and center-to-end dimensions of special degree elbows, see para. 6.2.5.
(h) For reinforcement of certain fittings, see para. 6.1.
(i) For drains, see para. 6.12.

NOTES:
(1) For center-to-contact surface and center-to-end dimensions of reducing fittings, see para. 6.2.3.
(2) For contact surface-to-contact surface and end-to-end dimensions of reducers and eccentric reducers, see para. 6.2.3.
(3) These dimensions apply to straight sizes only (see paras. 6.2.3 and 6.4.2.2). For the center-to-end dimensions of reducing fittings or end-to-end dimensions of reducers, use center-to-flange edge or flange edge-to-flange edge dimensions for largest opening, and add the proper height to provide for ring joint groove applying to each flange. See Table 5C for ring joint facing dimensions.

NONMANDATORY APPENDIX F
METHOD USED TO ESTABLISH SI UNIT VALUES

(20)

F-1 INTRODUCTION

The 2003 edition of ASME B16.5 contained dimensions expressed in millimeters and pressure–temperature ratings expressed in bar-Celsius, with U.S. Customary values enclosed in parentheses or listed separately from the SI values. This Appendix describes how the SI unit values were established at that time, then subsequently modified for the 2020 edition.

F-2 SI VALUES FOR THE 2003 EDITION

The B16 Subcommittee C had two primary goals during the development of the SI values shown in ASME B16.5-2003.

(a) The dimensions expressed in millimeters should reflect the needed precision as closely as possible.

(b) Flanges manufactured using existing forging dies and machinery settings based on the inch dimensions should be able to meet the requirements for the millimeter dimensions.

F-2.1 Conversion From Fractional Inches

Before 1977, ASME B16.5 dimensions were expressed mostly in fractional inches instead of decimal inches. For the 1977 edition, the fractional-inch values were converted to decimal-inch values. For example, $^1\!/_8$ in. was shown as 0.12 in. or 0.125 in., depending on the intended precision of the dimension.

Also, in the 1977 edition, millimeter dimensions were converted from the original fractional-inch dimensions rather than the decimal-inch dimensions. For example, $^1\!/_{16}$ in. (0.0625 in.) was converted to 1.6 mm and 0.06 in. wherever the intended precision was 0.01 in. However, if one converts 0.06 in. to millimeters, one gets 1.5 mm, not 1.6 mm. Thus, to a user converting decimal inches to millimeters, some of the conversions in the 2003 tables would appear to be incorrect.

In the 1977 edition, the dimension $^1\!/_{16}$ in. was sometimes converted to the nearest 0.1 mm, sometimes to the nearest 0.5 mm, and sometimes to the nearest 1 mm. The conversion depended on the intended precision of the measurement. So, the millimeter equivalent for 0.06 in. was sometimes shown as 1.6 mm, sometimes as 1.5 mm, and sometimes as 2 mm.

F-2.2 Toleranced Dimensions

Dimensions that ensure adequate fit-up and contribute to the integrity of the pressurized flange joint require tolerances. In the 2003 edition, these toleranced dimensions were converted such that the millimeter dimensions were essentially the same as the fractional-inch dimensions, and the tolerances were selected such that the permitted deviations from the tabulated dimensions were nearly identical to those permitted by the inch dimensions. Examples include the following:

(a) Bolt circle diameter was converted to the nearest 0.1 mm. This level of precision is needed to minimize problems with fit-up to other flanges, even though the tolerance on the dimension is 1.5 mm. Converting with less precision may cause additional problems with centering metal gaskets.

(b) Length through hub was converted to the nearest 1 mm. This dimension needs to be consistent to maintain overall dimensions for fabricated spools. Maintaining this dimension to the nearest whole millimeter provides the needed precision.

F-2.3 Untoleranced Dimensions

Dimensions that do not contribute significantly to proper fit-up or to the integrity of the pressurized flanged joint do not require tolerances. The following are examples of untoleranced dimensions and the philosophies used to convert them to the millimeter dimensions:

(a) A $^1\!/_{16}$-in. raised face was converted to 2 mm instead of 1.6 mm. Raised faces measuring other than 2 mm meet the requirements of the Standard. Conversion to the nearest millimeter reflects the intended precision of the dimension.

(b) Outside diameter of flanges was converted to the nearest 5 mm. For example, for NPS $^3\!/_4$ Class 600 flange outside diameter, $4^5\!/_8$ in. was converted to the nearest 5 mm (115 mm) instead of the nearest whole millimeter (117 mm) or tenth millimeter (117.5 mm). Outside diameters measuring other than 115 mm meet the requirements of the Standard. Conversion to the nearest 5 mm reflects the intended precision of the dimension.

(c) Bolt hole diameters were kept in fractional inches. Inch-dimension bolt holes were retained for flanges manufactured to millimeter dimensions. Inch bolts

should be used with these flanges. Extensive dimensional compatibility studies were conducted to explore the possibility of using millimeter- as well as inch-dimensioned bolting with ASME B16.5 flanges. The studies revealed that providing dimensions that allowed for the use of millimeter as well as inch-dimensioned bolts, especially when combined with metal gaskets, was impossible. This conclusion was supported by experience with some flanges manufactured to the 1980 edition of ISO 7005-1: Metallic flanges — Part 1: Steel flanges.

F-2.4 In Summary

The B16 Subcommittee C did not intentionally change any of the requirements for dimensions in the 2003 edition of ASME B16.5. The dimensions expressed in millimeters reflected the needed precision as closely as possible.

Flanges that were manufactured using existing forging dies and machinery settings based on the inch dimensions were able to meet the 2003 requirements for the millimeter dimensions. The acceptable dimension ranges for toleranced dimensions were not precisely the same in the two units of measure, but there was a significant amount of overlap. Still, it was possible for a flange to meet the requirements in one system of units and not in the other.

F-3 SI VALUES FOR THE 2020 EDITION

While the differences in inch and millimeter dimensions between the two versions of the same flange did not result in any known functional problem, the differences did confuse manufacturers and users alike. For example, since the precision of conversion of the flange outside diameter was to the nearest 5 mm, there sometimes was a difference of 2 mm to 3 mm between mating-flange outside diameters. This introduced a practical problem for users who welded attachments to mating flanges, and it also created an appearance problem. Engineers were confused when comparing inch and millimeter dimensions in the tables when the dimensions didn't match. They didn't know which dimension to use.

To address these problems, ASME B16.5-2020 features millimeter dimensions that have been converted from the decimal-inch dimensions rather than the fractional-inch dimensions and the conversions are more precise. The following are examples of changes in the 2020 edition:

(a) Outside diameters of flanges have been converted to nearest 1 mm instead of the nearest 5 mm.

(b) Raised face heights have been converted from 0.06 in. to 1.5 mm and from 0.25 in. to 6.4 mm instead of from 0.06 in. to 2 mm and from 0.25 in. to 7 mm.

(c) Inch tolerances have been revised to more closely match the millimeter tolerances.

ASME B16.5-2020

ISBN 978-0-7918-7379-3

9 780791 873793

M 0 1 5 2 1